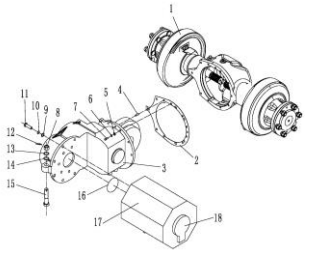

256898501001 驱动系统/DRIVE SYSTEM

序号/NO	编码/SN	名称	Name	数量/QTY	备注/Remark
1	256813511001	驱动桥(KD)	Drive axle(KD)	1	30-35Q
1	256713511001	驱动桥(KD)	Drive axle(KD)	1	25-28Q
1	256813515001	驱动桥(AQ)	Drive axle(AQ)	1	3.0-3.5T
1	256713515001	驱动桥(AQ)	Drive axle(AQ)	1	2.5-2.8T
2	256814020001	密封垫	Seal washer	1	
3	256814011001	变速箱(ZN)	Gear box (ZN)	1	选装/Optional
4	256814011002	变速箱(ZC)	Gear box (ZC)	1	选装/Optional
4	910600100029	圆柱销GB119.2-10x24	Dowel pin GB119.2-10x24	1	
5	910400100008	平垫圈GB97.1-12-200HV	Washer GB97.1-12-200HV	12	
6	910400500008	弹簧垫圈GB93-12	Washer GB93-12	12	
7	941100200006	螺栓M12x1.5x45-12.9	Bolt GB5786-M12x1.5x45-8.8	12	
8	910300900002	螺母GB6178-M20-8	Nut GB6178-M20-8	1	
~~9~~	~~910400100009~~	~~平垫圈GB97.1-14-200HV~~	~~Washer GB97.1-14-200HV~~	~~5~~	
10	910400500009	弹簧垫圈GB93-14	Washer GB93-14	5	
11	910100200027	螺栓GB5785-M14x1.5x155-8.8	Bolt GB5785-M14x1.5x155-8.8	5	
12	910600600037	开口销GB91-4x40	Split pin GB91-4x40	1	
13	910400500012	弹簧垫圈GB93-20	Washer GB93-20	9	
14	910400100012	平垫圈GB97.1-20-200HV	Washer GB97.1-20-200HV	1	
15	910100500006	螺栓GB31.1-M20x90-8.8	BoltGB31.1-M20x90-8.8	1	
16	910800100020	O形圈-内90x2.65	O ring 90x2.65	1	
17	256832011003	电机(交流)HPQ16	Motor (HP)	1	
18	255098513251	传感器 (HP)	Sensor(HP)	1	

256898501002 驱动桥-KD/DRIVE AXLE(30-35Q)-KD

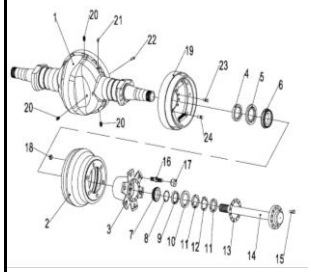

序号/NO	编码/SN	名称	Name	数量/QTY	备注/Remark
1	256898523501	驱动桥壳H-2301101-00	Driving axle housing	1	30-35Q
2	256898523502	制动鼓H-3103103-00	Drum brake	2	30-35Q
3	256898523503	轮毂H-3103101-00	Hub	2	30-35Q
4	256898523504	大油封座圈H-3103102-00	Large oil seal ring	2	30-35Q
5	256898523505	油封100X130X12	Seal ring100x130x12	2	30-35Q
6	256898523506	圆锥滚子轴承30214	Bearing30214	2	30-35Q
7	910700600020	圆锥滚子轴承32012	Bearing32012	2	30-35Q
8	254198523557	O型圈65X3.1	O-ring 65X3.1	2	30-35Q
9	256898523507	小油封座圈H-3103109-00	Small oil seal ring	2	30-35Q
10	254198523555	油封75X100X10	Seal ring 75x100x2	2	30-35Q
11	910300700005	圆螺母M60X2	Round nut M60X2	4	30-35Q
12	910400900013	止动垫圈60	Lock washer60	2	30-35Q
13	256898523508	半轴垫H-2303106-00	Half shaft pad	2	30-35Q
14	256898523509	半轴H-2303101-00	Half shaft	2	30-35Q
15	256898523510	半轴螺栓H-2303107-00	Half shaft bolt	24	30-35Q
16	256898523511	轮毂螺栓H-3103106-00	Hub bolt	12	30-35Q
17	256898523512	轮毂螺母H-3103110-00	Hub nut	12	30-35Q
18	910300200005	六角螺母M20X1.5	Nut M20X1.5	12	30-35Q
19	256898523513	左制动器H-3501100-00	Left brake	1	30-35Q
20	256898523514	右制动器H-3501200-00	Right brake	1	30-35Q
20	256898523515	堵塞ZG1/2 H-1701104-00	Pug ZG1/2	3	30-35Q
21	256898523516	透气塞H-2301301-00	Vent plug	1	30-35Q
22	256898523517	圆柱销	Pin	1	30-35Q
23	256898523518	制动器定位螺栓H-3501301-00	Brake positioning bolt	4	30-35Q
24	256898523519	制动器紧固螺栓H-3501302-00	Brake bolt	12	30-35Q

256898501002 驱动桥AQ/DRIVE AXLE(3.0-3.5t)-AQ

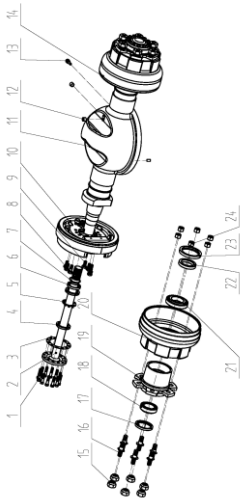

序号/NO	编码/SN	名称	Name	数量/QTY	备注/Remark
1	256998523501	半轴螺栓-24453-02061B		24	3.0-3.5T
2	256998523502	半轴-A22J3-02011		2	3.0-3.5T
3	256998523503	密封垫-A22A3-02031		2	3.0-3.5T
4	256998523504	圆螺母M58X2-25555-00004		4	3.0-3.5T
5	256998523505	止动垫圈58-25555-00006		2	3.0-3.5T
6	256998523506	衬套60X75X10-24453-02121G		2	3.0-3.5T
7	256998523507	O型圈59.6X2.4-2555-00008		2	3.0-3.5T
8	256998523508	制动器螺栓-25953-72001		2	3.0-3.5T
9	256998523509	制动器螺栓-A22A3-02051		4	3.0-3.5T
10	256998523510	右制动器总成-AXQ-Q03E5-1520R		12	3.0-3.5T
11	256998523511	桥壳-A22J3-02021A		1	3.0-3.5T
12	256998523512	螺塞-22193-03001		3	3.0-3.5T
13	256998523513	通气塞总成-90106-65690		1	3.0-3.5T
14	256998523514	左制动器总成1270-24433-70411		1	3.0-3.5T
15	256998523515	轮毂螺母-23913-02041B		12	3.0-3.5T
16	256998523516	轮毂螺栓-25303-02102B		12	3.0-3.5T
17	256998523517	油封75X100X10-25555-00009		2	3.0-3.5T
18	256998523518	圆锥滚子轴承33012		2	3.0-3.5T
19	256998523519	轮毂-25555-00003		2	3.0-3.5T
20	256998523520	制动鼓-24453-02131		2	3.0-3.5T
21	256998523521	圆锥滚子轴承30214		2	3.0-3.5T
22	256998523522	油封挡圈72X100X16-24453-02121G		2	3.0-3.5T
23	256998523523	油封100X125X12-Z6351-01004		2	3.0-3.5T
24	256998523524	螺母M20X1.5-B4223-00020B		12	3.0-3.5T

256898501003 制动器(左)/LEFT BRAKE(30-35Q)-LEFT

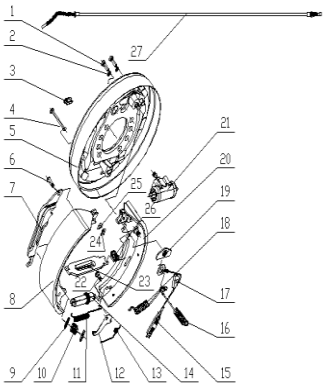

序号/NO	编码/SN	名称	Name	数量/QTY	备注/Remark
1	256898523532	螺栓M8×1.25×20GB/T5783-2000	Bolt M8 × one point two five × 20GB/T5783-200	2	
2	910400500006	弹簧垫圈GB93-8	Spring washer GB93-8	2	
3	256898523530	胶堵24433-70040G	Rubber plug 24433-70040G	2	大修理包含
4	256898523531	压簧拉杆24433-70010G	Spring tension rod 24433-70010G	2	大/小修理包含
5	256898523533	左制动器底板总成24433-72000G-L	Brake base plate assembly (left) 24433-7200G	1	
6	256898523537	手拉杆销24433-70150G	Pin 24433-70150G	1	大/小修理包含
7	256898523535	左手制动拉杆24433-70140G-L	Hand brake rod (left) 24433-70140G	1	
8	256898523539	制动蹄带摩擦片总成24433-71000G	Brake shoe with friction plate assembly 24433-7	1	
9	256898523545	压簧座24433-70020G	Pressure spring seat 24433-70020G	4	大/小修理包含
10	256898523546	压簧24433-70030G	Compression spring 24433-70030G	2	大/小修理包含
11	256898523548	拉簧24433-70050G	Tension spring 24433-70050G	1	大/小修理包含
12	256898523554	左棘爪24433-70100G-L	Pawl (left) 24433-70100G	1	大修理包含
13	256898523550	左扭簧24433-70090G-L	Torsion spring (left) 24433-70090G	1	大/小修理包含
14	256898523570	左间隙调整器总成24433-74000G-L	Left gap adjuster assembly 24433-74000G-L	1	大修理包含
15	256898523543	弹簧拉线装置24433-73000G	Spring cable device 24433-73000G	1	大修理包含
16	256898523553	左回位弹簧（后）24433-70071G-L	Return spring (front) 24433-70071G	1	大/小修理包含
17	256898523549	导向块24433-70081G	Guide block 24433-70081G	1	大修理包含
18	256898523556	左回位弹簧(前)24433-70070G-L	return spring (front) 24433-70010G-L	1	大/小修理包含
19	256898523552	导向板24433-70060G	Guide plate 24433-70060G	1	大修理包含
20	256898523574	左制动蹄带摩擦片及挂簧销总成24433-71001G-L	Left brake shoe with friction plate and spring pin	1	
21	256898523544	制动分泵总成2433-76000G	Brake wheel cylinder assembly	1	
22	256898523538	棘爪销钉24433-70110G	Pin 1 24433-70110G	1	大/小修理包含
23	256898523557	左手制动推杆24433-70120G-L	Push rod (left) 24433-70120G-L	1	大修理包含
24	256898523542	杆销挡圈24433-70170G	Rod pin retainer 24433-70170G	1	大/小修理包含
25	256898523541	弹性垫片24433-70160G	Elastic gasket 24433-70160G	1	大/小修理包含
26	256898523559	弹簧24433-70130G	Push spring 24433-70130G	1	大/小修理包含
27	256898523564	制动钢索总成（左）OC11246-14603-30	Brake cable assembly（left）OC11246-14603-3	1	L=1270
27	256898523565	制动钢索总成（右）OC11246-24603-30	Brake cable assembly (right)OC11246-24603-3	1	R=1790
A	256898523576	大修理包24433-70411G-DXLB	Major repair kit 24433-70411G-DXLB	1	大修理包
B	256898523577	小修理包24433-70411G-XXLB	Minor repair kit 24433-70411G-XXLB	1	小修理包

256898501003 制动器-右/LEFT BRAKE(30-35Q)-Right

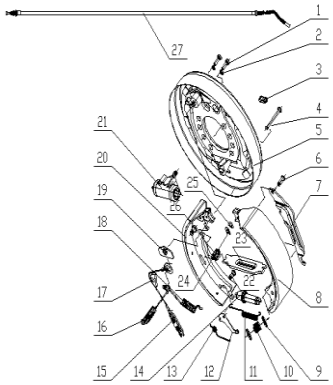

序号/NO	编码/SN	名称	Name	数量/QTY	备注/Remark
1	256898523532	螺栓M8×1.25×20GB/T5783-2000	Bolt M8 × one point two five × 20GB/T5783-200	2	
2	910400500006	弹簧垫圈GB93-8	Spring washer GB93-8	2	
3	256898523530	胶堵24433-70040G	Rubber plug 24433-70040G	2	大修理包含
4	256898523531	压簧拉杆24433-70010G	Spring tension rod 24433-70010G	2	大/小修理包含
5	256898523534	右制动器底板总成24433-72000G-R	Brake backing plate assembly (right)	1	
6	256898523537	手拉杆销24433-70150G	Pin 24433-70150G	1	大/小修理包含
7	256898523536	右手制动拉杆24433-70140G-R	Hand brake rod (right)	1	
8	256898523539	制动蹄带摩擦片总成24433-71000G	Brake shoe with friction plate assembly 24433-7	1	
9	256898523545	压簧座24433-70020G	Pressure spring seat 24433-70020G	4	大/小修理包含
10	256898523546	压簧24433-70030G	Compression spring 24433-70030G	2	大/小修理包含
11	256898523548	拉簧24433-70050G	Tension spring 24433-70050G	1	大/小修理包含
12	256898523555	右棘爪24433-70100G-R	Pawl (right)	1	大修理包含
13	256898523551	右扭簧24433-70090G-R	Torsion spring (right)	1	大/小修理包含
14	256898523571	右间隙调整器总成24433-74000G-R	Right gap adjuster assembly 24433-74000G	1	大修理包含
15	256898523543	弹簧拉线装置24433-73000G	Spring cable device 24433-73000G	1	大修理包含
16	256898523572	左回位弹簧（后）24433-70071G-R	Return spring () 24433-70071G	1	大/小修理包含
17	256898523549	导向块24433-70081G	Guide block 24433-70081G	1	大修理包含
18	256898523573	左回位弹簧(前)24433-70070G-R	Return spring (l) 24433-70010G-L	1	大/小修理包含
19	256898523552	导向板24433-70060G	Guide plate 24433-70060G	1	大修理包含
20	256898523575	右制动蹄带摩擦片及挂簧销总成24433-71001G-R	Right brake shoe with friction plate and spring pi	1	
21	256898523544	制动分泵总成2433-76000G	Brake wheel cylinder assembly	1	
22	256898523538	棘爪销钉24433-70110G	Pin 1 24433-70110G	1	大/小修理包含
23	256898523558	右手制动推杆24433-70120G-R	Push rod (left) 24433-70120G-R	1	大修理包含
24	256898523542	杆销挡圈24433-70170G	Rod pin retainer 24433-70170G	1	大/小修理包含
25	256898523541	弹性垫片24433-70160G	Elastic gasket 24433-70160G	1	大/小修理包含
26	256898523559	弹簧24433-70130G	Push spring 24433-70130G	1	大/小修理包含
27	256898523565	制动钢索总成（右）OC11246-24603-30	Brake cable assembly (right)OC11246-24603-3	1	R=1790
A	256898523578	大修理包24433-70412G-DXLB			大修理包
B	256898523579	小修理包24433-70412G-XXLB			小修理包

256898501004 驱动桥-KD/DRIVE AXLE(25-28Q)-KD

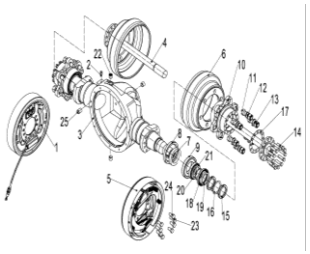

序号/NO	编码/SN	名称	Name	数量/QTY	备注/Remark
1	256798523501	左制动器G-3501100-00	Left brake	1	25-28Q
2	256898523516	透气塞H-2301301-00	Vent plug	1	25-28Q
3	256798523502	驱动桥壳G-2301101-04	Driving axle housing	1	25-28Q
4	256798523503	半轴G-2303101-04	Half shaft	2	25-28Q
5	256798523504	右制动器G-3501200-00	Right brake	1	25-28Q
6	256798523505	制动鼓G-3103103-00	Drum brake	2	25-28Q
7	256898523504	大油封座圈H-3103102-00	Large oil seal ring	2	25-28Q
8	256898523505	油封100X130X12	Seal ring100x130x12	2	25-28Q
9	256898523506	圆锥滚子轴承30214	Bearing30214	2	25-28Q
10	256798523506	轮毂G-3103101-04	Hub	2	25-28Q
11	910300200005	六角螺母M20X1.5	Nut M20X1.5	12	25-28Q
12	256798523507	轮毂螺栓G-3103106-00	Hub bolt	12	25-28Q
13	256798523508	轮毂螺母G-3103110-04	Hub nut	12	25-28Q
14	256898523510	半轴螺栓H-2303107-00	Half shaft bolt	24	25-28Q
15	910300700005	圆螺母M60X2	Round nut M60X2	4	25-28Q
16	910400900013	止动垫圈60	Lock washer60	2	25-28Q
17	256798523509	半轴垫G-2303106-00	Half shaft pad	2	25-28Q
18	254198523555	油封75X100X10	Seal ring 75x100x2	2	25-28Q
19	256898523507	小油封座圈H-3103109-00	Small oil seal ring	2	25-28Q
20	254198523557	O型圈65X3.1	O-ring 65X3.1	2	25-28Q
21	910700600020	圆锥滚子轴承32012	Bearing32012	2	25-28Q
22	256898523515	堵塞ZG1/2 H-1701104-00	Pug ZG1/2	3	25-28Q
23	256898523518	制动器定位螺栓H-3501301-00	Brake positioning bolt	4	25-28Q
24	256898523519	制动器紧固螺栓H-3501302-00	Brake bolt	12	25-28Q
25	256898523517	圆柱销	Pin	1	25-28Q
~~26~~	~~256798523509~~	~~主减密封垫H-23022101~~	~~Main reduction gasket~~	~~1~~	~~25-28Q~~

256898501004 驱动桥-AQ /DRIVE AXLE(2.5-2.8T)

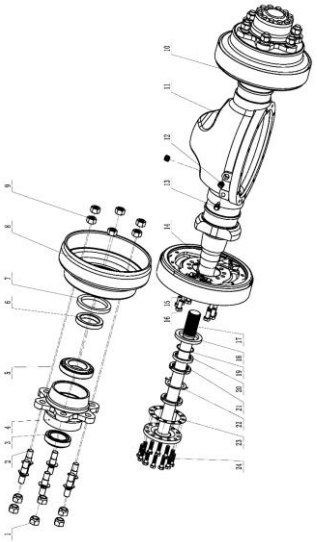

序号/NO	编码/SN	名称	Name	数量/QTY	备注/Remark
1	256798524501	锥螺母-24354-32311B		12	2.5-2.8T
2	256798524502	柱螺栓-24353-72001B		12	2.5-2.8T
3	256998523518	轴承33012		2	2.5-2.8T
4	256798524503	轮毂-A20A3-02011JXX		2	2.5-2.8T
5	256998523521	轴承30214		2	2.5-2.8T
6	256998523522	油封挡圈-24453-02121G		2	2.5-2.8T
7	256998523523	油封100X125X12-Z6351-01004		2	2.5-2.8T
8	256798524504	制动毂-22673-02031		2	2.5-2.8T
9	256998523524	螺母M20X1.5-B4223-00020B		12	2.5-2.8T
10	256798524505	右制动器总成REF00056R		1	2.5-2.8T
11	256798524506	驱动桥壳-02041A		1	2.5-2.8T
12	256998523512	堵塞-22193-03001		3	2.5-2.8T
13	256998523513	通气塞总成-90106-65690		1	2.5-2.8T
14	256798524510	左制动器总成REF00056L		1	2.5-2.8T
15	256998523508	螺栓M14X1.5X38-25953-72001		4	2.5-2.8T
16	256998523509	螺栓M14X1.5X30-A22A3-02051		12	2.5-2.8T
17	256798524507	半轴-A20A3-02051		2	2.5-2.8T
18	256998523517	油封75X100X10-25555-00008		2	2.5-2.8T
19	256998523507	O型圈59.6X2.4		2	2.5-2.8T
20	256998523506	衬套-25555-00007		2	2.5-2.8T
21	256998523504	圆螺母M58X2-25555-00004		4	2.5-2.8T
22	256998523505	止退垫圈58-25555-00006		2	2.5-2.8T
23	256998523503	半轴垫-A22A3-02031		2	2.5-2.8T
24	256998523501	半轴螺栓-24453-02061B		24	2.5-2.8T

256898501005 制动器（左）/LEFT BRAKE(25-28Q)-左

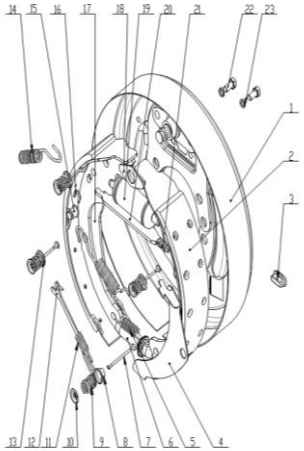

序号/NO	编码/SN	名称	Name	数量/QTY	备注/Remark
1	256798523530	制动器底板总成23653-73011-L	Brake base plate assembly 23653-73011-L	1	
2	256798523538	制动蹄带摩擦片总成23653-73021	Friction plate assembly 23653-73021	2	
3	256798523560	胶堵22673-72321	Glue plug 22673-72321	2	大修理包
4	256798523561	左调整杠杆23653-72321-L	Left adjusting lever 23653-72321-L	1	大修理包
5	256798523537	拉簧23653-72051	Spring 23653-72051	1	大/小修理包
6	256798523536	左间隙调整器23653-72041-L	Clearance adjuster 23653-72041-L	1	大修理包
7	256798523532	压簧拉杆23653-72101	Spring tension rod 23653-72101	4	大/小修理包
8	256798523546	压簧座23653-72121	Pressure spring seat 23653-72121	1	大/小修理包
9	256798523547	压簧23653-72091	Spring 23653-72091	4	大/小修理包
10	256798523548	压簧盖23653-72111	Spring compression cover 23653-72111	4	大/小修理包
11	256798523550	顶杆拉簧2353-72171	Tension spring 2353-72171	1	大/小修理包
12	256798523545	顶杆23653-72161	Push rod 23653-7261	1	大/小修理包
13	256798523553	压簧座23673-72391	Compression spring 23673-72391	3	大/小修理包
14	256798523549	回位弹簧23673-72261	Return spring 23673-72261	2	大/小修理包
15	256798523542	手拉杆销22673-72231	Support pin 22673-72231	1	大/小修理包
16	256798523564	杆销挡圈22673-72251	Rod pin stop ring 22673-72251	1	大/小修理包
17	256798523540	左手制动拉杆23653-72071-L	Left hand brake rod 23653-72071-L	1	大修理包
18	256798523544	导向板23653-72131	Gasket 23653-72131	1	大修理包
19	256798523533	左制动分泵总成22373-72041-L	Brake wheel cylinder assembly 22373-72041-L	1	
20	256798523551	手制动推杆23653-72081	Hand brake push rod 23653-72081	1	大修理包
21	256798523566	压缩弹簧23673-72391	compression spring 23673-72391	1	大/小修理包
22	910100300020	螺栓GB5782-M8x16	Bolt GB5782-M8x16	2	
23	910400500006	弹簧垫圈GB93-8	Spring washer GB93-8	2	
24	256798523534	制动器钢索总成OC11246-14603	Brake cable assembly OC11246-14603	1	
A	256798523567	大修理包REF000560-L-DXLB	Major repair kit REF000560-L-DXLB	1	
B	256798523568	小修理包REF000560-L-XXLB	Minor repair kit REF000560-L-XXLB	1	

256898501005 制动器（右）/LEFT BRAKE(25-28Q)-Right

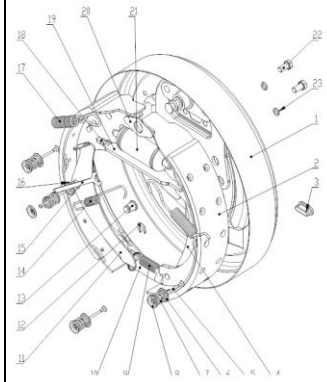

序号/NO	编码/SN	名称	Name	数量/QTY	备注/Remark
1	256798523531	右制动器底板总成23653-73011-R	Brake base plate assembly 23653-73011-R	1	
2	256798523538	制动蹄带摩擦片总成23653-73021	Friction plate assembly 23653-73021	2	
3	256798523560	胶堵22673-72321	Glue plug 22673-72321	2	大修理包
4	256798523541	右手制动拉杆23653-72071-R	Right hand brake rod 23653-72071-R	1	大修理包
5	256798523532	压簧拉杆23653-72101	Spring tension rod 23653-72101	4	大/小修理包
6	256798523546	压簧座23653-72121	Pressure spring seat 23653-72121	4	大/小修理包
7	256798523547	压簧23653-72091	Spring 23653-72091	4	大/小修理包
8	256798523548	压簧盖23653-72111	Spring compression cover 23653-72111	4	大/小修理包
9	256798523537	拉簧23653-72051	Spring 23653-72051	1	大/小修理包
10	256798523563	右间隙调整器23653-72041-R	Clearance adjuster 23653-72041-R	1	大修理包
11	256798523562	右调整杠杆23653-72322-R	Right adjusting lever 23653-72321-R	1	大修理包
12	256798523564	杆销挡圈22673-72251	Rod pin stop ring 22673-72251	1	大/小修理包
13	256798523542	拉杆销22673-72231	Support pin 22673-72231	1	大/小修理包
14	256798523550	顶杆拉簧2353-72171	Tension spring 2353-72171	1	大/小修理包
15	256798523545	顶杆23653-72161	Push rod 23653-7261	1	大/小修理包
16	256798523553	压簧座23673-72391	Compression spring 23673-72391	1	大/小修理包
17	256798523549	回位弹簧23673-72261	Return spring 23673-72261	2	大/小修理包
18	256798523566	压缩弹簧23673-72391	compression spring 23673-72391	1	大/小修理包
19	256798523551	手制动推杆23653-72081	Hand brake push rod 23653-72081	1	大修理包
20	256798523544	导向板23653-72131	Gasket 23653-72131	1	大修理包
21	256798523565	右制动分泵总成22373-72041-R	Brake wheel cylinder assembly 22373-72041-R		
22	910100300020	螺栓GB5782-M8x16	Bolt GB5782-M8x16	2	
23	910400500006	弹簧垫圈GB93-8	Spring washer GB93-8	2	
24	256798523535	制动器钢索总成右OC11246-24603	Brake cable assembly right OC11246-24603	1	
A	256798523569	大修理包REF000560-R-DXLB	Major repair kit REF000560-R-DXLB	1	
B	256798523570	小修理包REF000560-R-XXLB	Minor repair kit REF000560-R-XXLB	1	

256898501006 变速箱(ZN)/GEARBOX(ZN)

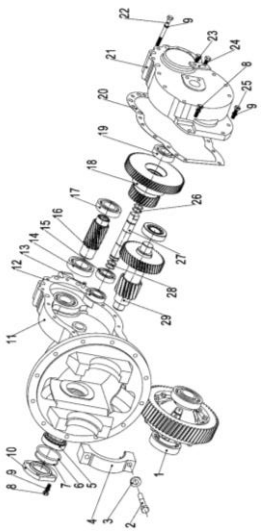

序号/NO	编码/SN	名称	Name	数量/QTY	备注/Remark
1	256898514001	差速器总成HDCS35ⅢA.901	Differential assembly HDCS35ⅢA.901	1	
2	256898524001	螺栓YDS30.089	Bolt YDS30.089	4	
3	256898524002	重型弹簧垫圈GB/T7244-14	Heavy-duty spring washer	4	
4	256898524003	轴承座YDS30.072	bearing pedestal YDS30.072	2	
5	255098524023	圆锥滚子轴承32207	Bearing 32207	2	
6	256898524004	调整垫YDS30.090	Adjustable pad YDS30.090	3/4	
7	256898524005	O形圈73×3.1 GB1235	O-ring 73×3.1 GB1235	1	
8	910100300036	六角头螺栓GB5783-M10×25	Bolt GB5783-M10×25	5	
9	910400500007	标准型弹簧垫圈GB93-10	Spring Washer GB93-10	19	
10	256898524006	轴承盖YDS30.168	Bearing cap YDS30.168	1	
11	256898524007	箱体HDCS35ⅢA.001	Box HDCS35ⅢA.001	1	
12	910700200021	深沟球轴承GB/T276-6206	Bearing GB/T276-6206	1	
13	255098526008	圆柱销GB/T119.1-10×20	Pin GB/T119.1-10×20	2	
14	910700200023	深沟球轴承GB/T276-6208	Bearing GB/T276-6208	1	
15	256898524008	圆柱滚子轴承GB/T283-NJ2206E	Bearing GB/T283-NJ2206E	1	
16	256898524009	输入轴HDCS35ⅢA.003	Input axis HDCS35ⅢA.003	1	
17	910700200024	深沟球轴承GB/T276-6209	Bearing GB/T276-6209	1	
18	256898524010	双联齿轮组件HDCS35ⅢA.803	Double gear assembly HDCS35ⅢA.803	1	
19	910700200033	深沟球轴承6307 GB/T 276	Bearing 6307 GB/T 276	1	
20	256898524011	箱体箱盖结合面纸垫HDCS35ⅢA.010	Paper pad HDCS35ⅢA.010	1	
21	256898524012	箱盖HDCS35ⅢA.002	Case cover HDCS35ⅢA.002	1	
22	910100100040	六角头螺栓GB5782-M10×90	Bolt GB5782-M10×90	10	
23	910100300034	六角头螺栓GB5783-M10×16	Bolt GB5783-M10×16	2	
24	256898524013	挡块HDCS25.008	Link stopper HDCS25.008	1	
25	910100300038	六角头螺栓GB5783-M10×35	Bolt GB5783-M10×35	2	
26	910800100006	O形圈35×3.1 GB1235	O-ring 35×3.1 GB1235	2	
27	256898524014	中间轴HDCS35ⅢA.009	Intermediate shaft HDCS35ⅢA.009	1	
28	255098524010	O形圈25×2.65 GB/T3452.1	O-ring 25×2.65 GB/T3452.1	2	
29	256898524015	齿轴组件HDCS35ⅢA.804	Gear shaft components HDCS35ⅢA.804	1	

256898501007 差速器(ZN)/DIFFERENTIAL MECHANISM(ZN)

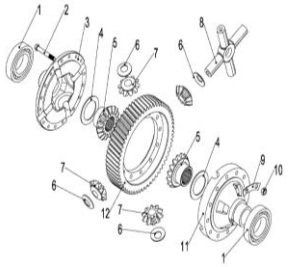

序号/NO	编码/SN	名称	Name	数量/QTY	备注/Remark
1	256898524016	深沟球轴承6213 GB/T 276	Bearing 6213 GB/T 276	2	
2	256898524017	螺栓HDCS35ⅢA.012	Bolt HDCS35ⅢA.012	16	
3	256898524018	右差速器壳HDCS35ⅢA.011	Right differential housing HDCS35ⅢA.011	1	
4	256898524019	垫圈YDS30.079S	Washer YDS30.079S	2/3×2	
5	256898524020	半轴齿轮YDS30.085	axle shaft gear YDS30.085	2	
6	256898524021	止推垫圈YDS30.084	Thrust washer YDS30.084	4	
7	256898524022	行星齿轮YDS30.083	Planetary gear YDS30.083	4	
8	256898524023	十字轴14453-52101A	Universal joint pin 14453-52101A	1	
9	256898524024	锁片HDCS35ⅢA.014	Locking plate HDCS35ⅢA.014	8	
10	910300200003	六角螺母GB/T6171-M12×1.25	Nut GB/T6171-M12×1.25	16	
11	256898524025	左差速器壳HDCS35ⅢA.013	Left differential housing HDCS35ⅢA.013	1	
12	256898524026	齿圈HDCS35ⅢA.008	Gear ring HDCS35ⅢA.008	1	

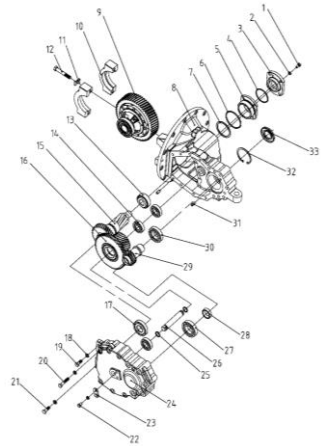

256898501008 变速箱(ZC)/GEARBOX(ZC)					
序号/NO	编码/SN	名称	Name	数量/QTY	备注/Remark
1	910100300036	螺栓M10×25	Bolt M10×25	4	
2	910400500007	弹簧垫圈10	Spring washer 10	6	
3	293698520001	轴承盖Ⅱ-HDCS30-01004	Bearing cap - HDCS30-01004	1	
4	293998520234	O型圈73×2.65	O-ring 73×2.65	1	
5	293698520003	轴承盖Ⅰ HDCS30-01003	Gear shaft gasket Y30H-09002	1	
6	293698520004	O型圈GB3452.1-85X2.65	O-ring GB3452.1-85X2.65	1	
7	293098524041	调整垫片Y30H-09002	Gear shaft gasket Y30H-09002	按需	
8	293698520005	箱体HDCS30-01001-1	Body components HDCS30-01001-1	1	
9	293698510001	差速器总成HDCS30-05000	Differential Assembly (Medium Diesel)	1	
10	293098524003	轴承座Y30H-01002	Bearing seat Y30H-01002	2	
11	293098524002	轴承座锁片Y30H-01008	Lock plate Y30H-01008	4	
12	293098524001	轴承座螺栓Y30H-01010	Bearing seat bolt Y30H-01010	4	
13	293698520006	圆锥滚子轴承GB/T297-32306	Tapered roller bearing GB/T297-32306	1	
14	910700200031	深沟球轴承GB/T276-6305	Three axis bearing 6305-2RZ	3	
15	293698520007	齿轴HDCS30-04001	Axis HDCS30-040001	1	
16	293698520008	双联齿轮HDCS20-03003-1	Duplicate gear HDCS20-03003-1	1	
17	293698520009	圆锥滚子轴承GB/T297-30307	Tapered roller bearing	1	
18	910400500008	弹簧垫GB93-12	Spring Washer GB93-12	11	
19	910100400010	螺栓GB/T5786-M12X1.25X30	Bolt GB/T5786-M12X1.25X30	1	
20	293698520010	螺栓GB/T5785-M12X1.25X100	Bolt M12*1.25*100	9	
21	910100400012-D02	螺栓GB/T5786-M12X1.25X40	Bolt GB/T5786-M12X1.25X40	1	
22	910100300034	螺栓 M10X16	Bolt M10X16	2	
23	293698520011	挡板HDCS20-03001	Link stopper HDCS20-03001	1	
24	293698520012	箱盖HDCS30-01002	Case cover HDCS30-01002	1	
25	910800100022	O型圈GB/T1235-25X2.4	O-Ring GB1235-25X2.4	2	
26	293698520014	轴HDCS20-03002	Axis HDCS20-03002	1	
27	910700200024	深沟球轴承6209	Bearing 6209	1	
28	255098524062	密封盖HDCSB30-02002	Seal cover HDCSB30-02002	1	
29	293698520016	输入轴HDCS30-02001-2	Input shaft HDCS30-02001-2	1	
30	910700200023	深沟球轴承6208	Bearing 6208	1	
31	293698520017	圆柱销GB/T119.1-A10X22	Pin A10X22	2	
32	910401400022	孔用弹性挡圈GB893.1-80	Circlip	1	
33	293698520018	油封40*80*8-HDCS30-01005	Oil seal HDCS30-01005	1	

256898501009 差速器(ZG)/DIFFERENTIAL MECHANISM(ZG)

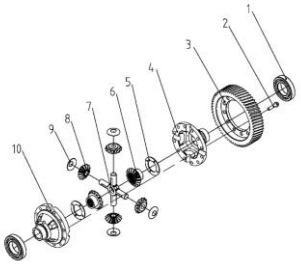

序号/NO	编码/SN	名称	Name	数量/QTY	备注/Remark
1	256898525018	深沟球轴承 6213GB/T 276	Bearing 6213GB/T 276	2	
2	256898525019	法兰面螺栓 M14*1.5*60GB/T 16674.2	Bolt M14*1.5*60GB/T 16674.2	12	
3	256898525020	齿圈HDCS30-05001	Gear ringHDCS30-05001	1	
4	256898525021	右差速器壳HDCS30-05003	Right differential housing HDCS30-05003	1	
5	256898525022	半轴垫圈Y30H-10006	Half shaft washerY30H-10006	2	
6	256898525023	半轴齿轮Y30H-10007	Axle shaft gearY30H-10007	2	
7	256898525024	十字轴Y30H-10003	Universal joint pin Y30H-10003	1	
8	256898525025	行星齿轮Y30H-10005	Planetary gear Y30H-10005	4	
9	256898525026	行星垫圈Y30H-10004	Planetary washer Y30H-10004	4	
10	256898525027	左差速器壳HDCS30-05002	Left differential housingHDCS30-05002	1	

256898501010 前轮总成/WHEEL ASSEMBLY(30-35Q)

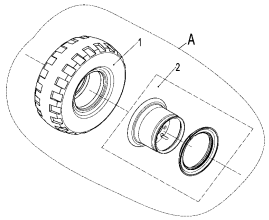

序号/NO	编码/SN	名称	Name	数量/QTY	备注/Remark
A	256813010001	轮胎总成28X9-15-14PR(充气)	Tire assembly 28X9-15-14PR(pneumatic)	2	
	256813010002	轮胎总成28X9-15(实心)	Tire assembly 28X9-15(soild)	2	选装/Optional
	256813010003	轮胎总成28X9-15(环保)	Tire assembly 28X9-15(environmentally)	2	选装/Optional
1	256813011002	轮胎28X9-15-14PR(充气)	Tire 28X9-15-14PR(pneumatic)	2	
	256813012002	轮胎28X9-15(实心)	Tire 28X9-15(soild)	2	选装/Optional
	256813012003	轮胎28X9-15(环保)	Tire 28X9-15(environmentally)	2	选装/Optional
2	256813011001	轮辋总成(7.00T-15)	Rim assembly(7.00T-15)	2	

256898501011 前轮总成/WHEEL ASSEMBLY(25-28Q)

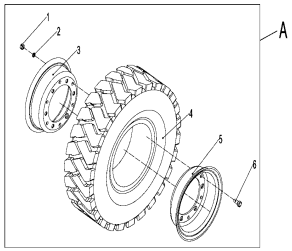

序号/NO	编码/SN	名称	Name	数量/QTY	备注/Remark
A	256713010008	轮胎总成7.00-12-14PR+(充气)	Tire assembly 7.00-12-14PR+(pneumatic)	2	2.5-2.8t
A	256713010002	轮胎总成70-10(实心)	Tire assembly 7.00-10(soild)	2	2.5-2.8t/选装
A	256713010003	轮胎总成7.00-10(环保)	Tire assembly 7.000-10(environmentally)	2	2.5-2.8t/选装
1	910300100010	螺母GB6170-M16-10	Nut GB6170-M16-10	16	
2	910400500010	弹簧垫圈GB93-16	Spring washerGB93-16	16	
3	256713021001	内轮辋5.00S-12	Inner rim 5.00S-12	2	
4	256713018001	轮胎7.00-10-14PR+(充气)	Tire 7.00-10-14PR+(pneumatic)	2	2.5-2.8t/选装
4	256713012002	轮胎7.00-10(实心)	Tire 7.00-10(solid)	2	2.5-2.8t/选装
4	256713012003	轮胎7.00-10(环保)	Tire 7.00-10(environmentally)	2	2.5-2.8t/选装
5	256713021002	外轮辋5.00S-12	Outer rim 5.00S-12	2	
6	256713021003	轮辋螺栓(M16)	Rim bolt M16	16	

256898501012 后轮总成/WHEEL ASSEMBLY(30-35Q)

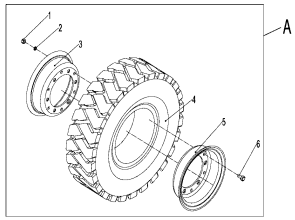

序号/NO	编码/SN	名称	Name	数量/QTY	备注/Remark
A	256815510001	轮胎总成6.50-10-10PR(充气)	Tire assembly 6.50-10-10PR(pneumatic)	2	
A	256815510002	轮胎总成6.50-10(实心)	Tire assembly 6.50-10(soild)	2	选装/Optional
A	256815510003	轮胎总成6.50-10(环保)	Tire assembly 6.50-10(environmentally)	2	选装/Optional
1	910300200003	螺母GB6171-M12x1.25-10	Nut GB6171-M12x1.25-10	16	
2	910400500008	弹簧垫圈GB93-12	Spring washerGB93-12	16	
3	256815520001	内轮辋6.50F-10	Inner rim 6.50F-10	2	
4	254113010007	轮胎6.50-10-10PR(充气)	Tire 6.50-10-10PR(pneumatic)	2	
4	254113010005	轮胎6.50-10(实心)	Tire 6.50-10(solid)	2	
4	254113010006	轮胎6.50-10(环保)	Tire 6.50-10(environmentally)	2	
5	256815520002	外轮辋6.50F-10	Outer rim6.50F-10	2	
6	255013020001	轮辋螺栓M12x1.5x26	Rim bolt M12x1.5x26	16	

256798501013 后轮总成/WHEEL ASSEMBLY(25-28Q)

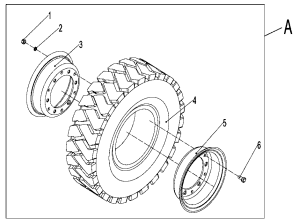

序号/NO	编码/SN	名称	Name	数量/QTY	备注/Remark
A	256715510008	轮胎总成6.00-9-12PR(充气)	Tire assembly 6.00-9-12PR(pneumatic)	2	25-28Q/选装
A	256715510002	轮胎总成6.00-9(实心)	Tire assembly 6.00-9(soild)	2	25-28Q/选装
A	256715510003	轮胎总成6.00-9(环保)	Tire assembly 6.50-10(environmentally)	2	25-28Q/选装
1	910300200003	螺母GB6171-M12x1.25-10	Nut GB6171-M12x1.25-10	16	
2	910400500008	弹簧垫圈GB93-12	Spring washerGB93-12	16	
3	256715521001	内轮辋4.00E-9	Inner rim 4.00E-9	2	
4	256715518001	轮胎6.00-9-12PR(充气)	Tire 6.00-9-10PR(pneumatic)	2	25-28Q/选装
4	256715512002	轮胎6.00-9(实心)	Tire 6.00-9(soild)	2	25-28Q/选装
4	256715512003	轮胎6.00-9(环保)	Tire 6.50-10(environmentally)	2	25-28Q/选装
5	256715521002	外轮辋4.00E-9	Outer rim 4.00E-9	2	
6	255013020001	轮辋螺栓M12x1.5x26	Rim bolt M12x1.5x26	16	

256898501014 起升电机安装/MOTOR INSTALLATION

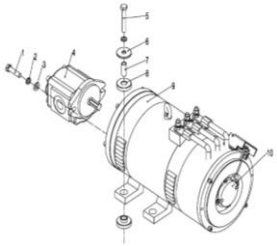

序号/NO	编码/SN	名称	Name	数量/QTY	备注/Remark
1	910100300037	螺栓GB5783-M10x30-8.8	Bolt GB5783 M10x30-8.8	2	
2	910400100007	垫圈 GB97.1-10-200HV	Gasket GB97.1-10-200HV	6	
3	910400500007	弹簧垫圈 GB93-10	Spring washer GB93-10	6	
4	255023512006	齿轮泵	Gear pump	1	
5	910100100034	螺栓 GB5782-M10x55-8.8	Bolt GB5782 M10x55-8.8	4	
6	255032520002	垫圈 Φ40xΦ11x4	Gasket Φ40xΦ11x4	4	
7	255032520001	衬套 Φ13xΦ10.5x32	Bushing Φ13XΦX10.5x32	4	
8	255032520003	减振垫	Damping pad	8	
9	920900100123	电机(HP)	Motor (HP)	1	
10	255098513251	编码器（HP）	Encoder(HP)	1	

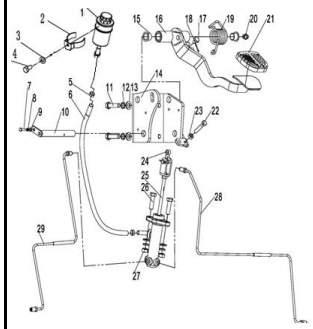

256898501015 行车制动安装/DRIVING BRAKING INSTALLATION

序号/NO	编码/SN	名称	Name	数量/QTY	备注/Remark
1	275011520020	油杯	Grease nipple	1	
2	256811511020	油杯固定环	Bracket	1	
3	910400500007	弹簧垫圈GB93-8	Washer GB93-8	1	
4	910100300020	螺栓GB5783-M8x16-8.8	Bolt GB5783-M8x16-8.8	1	
5	911000600001	喉箍QC/T390-(11-14)	Hose clamp QC/T390-(11-14)	2	
6	255011520021	连接管	Connecting pipe	1	
7	910100300003	螺栓GB5783-M5x12-8.8	Bolt GB5783-M5x12-8.8	1	
8	910400500004	弹簧垫圈GB93-5	Washer GB93-5	1	
9	910400100004	平垫圈GB97.1-5-200HV	Washer GB97.1-5-200HV	1	
10	255011510003	带耳轴Φ16x135	Axle Φ16x135	1	
11	910100300039	螺栓GB5783-M10x40-8.8	Bolt GB5783-M10x40-8.8	4	
12	910400500007	弹簧垫圈GB93-10	Washer GB93-10	6	
13	910400100007	平垫圈GB97.1-10-200HV	Washer GB97.1-10-200HV	6	
14	256811511004	脚制动支架焊合	Foot brake holder welding	1	
15	940500100006	复合套Φ16xΦ18x15-SF-1	Bushing Φ16xΦ18x15-SF-1	2	
16	256811511002	踏板焊合	Pedal weiding	1	
17	255011520010	缓冲垫	Damping pad	1	
18	910600600015	开口销GB91-2x20	Split pin GB91-2x20	1	
19	255011520008	扭簧	Spring	1	
20	911200100004	油杯JB7940.1-M10x1	Grease nipple JB7940.1-M10x1	1	
21	255011520013	踏板(橡胶)	Pedal (rubber)	1	
22	910100100023	螺栓GB5782-M8x45-8.8	Bolt GB5782-M8x45-8.8	1	
23	910300100006	螺母GB6170-M8-10	Nut GB6170-M8-10	1	
24	940500100048	复合套Φ10xΦ12x8-SF-1	Bushing Φ10xΦ12x8-SF-1	1	
25	256811510001	制动泵总成	Brake pump assembly	1	
26	910100300038	螺栓GB5783-M10x35-8.8	Bolt GB5783-M10x35-8.8	2	
27	910300100007	螺母GB6170-M10-10	NutGB6170-M10-10	2	
28	256711511009	右制动钢管	Brake steel pipe welding	1	25-28Q
	256811511009	右制动钢管	Brake steel pipe welding	1	30-35Q
29	256711511010	左制动钢管	Brake steel pipe welding	1	25-28Q
	256811511010	左制动钢管	Brake steel pipe welding	1	30-35Q

256898501016 驻车制动安装/PARKING BRAKING INSTALLATION

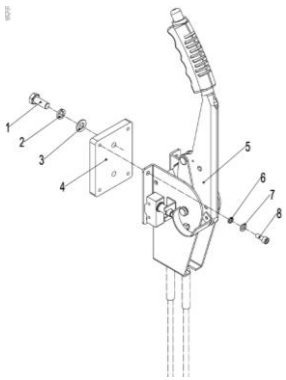

序号/NO	编码/SN	名称	Name	数量/QTY	备注/Remark
1	910100300035	螺栓GB5783-M10x20-8.8	Bolt GB5783-M10x20-8.8	2	
2	910400500007	弹簧垫圈GB93-10	Spring washer GB93-10	2	
3	910400100007	平垫圈GB97.1-10-200HV	Washer GB97.1-10-200HV	2	
4	256812021003	垫板(手制动)	Backing plate (Parking brake)	1	
5	XG1801542747	手制动总成	Parking Brake Assembly	1	
6	910400100005	平垫圈GB97.1-6-200HV	Washer GB97.1-6-200HV	4	
7	910400500005	弹簧垫圈GB93-6	Spring washer GB93-6	4	
8	910100300010	螺栓GB5783-M6x16-8.8	Bolt GB5783-M6x16-8.8	4	

256898501017 转向泵置及安装/STEERING GEAR AND INSTALLATION

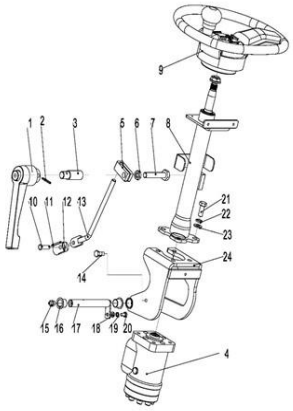

序号/NO	编码/SN	名称	Name	数量/QTY	备注/Remark
1	255015010007	可调手柄	The adjustable handle	1	
2	910600400011	弹性圆柱销GB879.1-4x30	Elastic cylinder pin GB879.1-4x30	1	
3	255015020025	夹柄螺套	Clamp holder screw sets	1	
4	255015010002	转向器100	Steering 100	1	
5	255015020019	锁紧块	Locking block	1	
6	910300300006	螺母GB6172.1-M12-05	Nut GB6172.1-M12-05	1	
7	910100300057	螺栓GB5783-M12x70-8.8	Bolt GB5783 M12x70-8.8	1	
8	255015010001	转向管柱总成	Steering string assembly	1	
9	255015010003	方向盘	The steering wheel	1	
10	910600700014	销轴GB882-6x26x1.6	Pin GB882-6x26x1.6	1	
11	910600600005	开口销GB91-1.6x10	Cotter pin GB91-1.6x10	1	
12	255015020002	固定座	The fixed seat	1	
13	255015010005	调节杆焊合	Adjust rod welding	1	
14	255015020021	调节螺钉	Adjust the screw	1	
15	911200100004	油杯JB7940.1-M10x1	Oil cup JB7940.1-M10x1	1	
16	940500200016	复合套(带肩)Φ16xΦ18x16-SF-1	Composite set (shoulder)Φ16xΦ18x16-SF-1	2	
17	255011510003	带耳轴Φ16x135	With trunnionΦ16x135	1	
18	910400100005	平垫圈GB97.1-6-200HV	WasherGB97.1-6-200HV	1	
19	910400500005	弹簧垫圈GB93-6	Spring washerGB93-6	1	
20	910100300009	螺栓GB5783-M6x12-8.8	Bolt GB5783 M6x12-8.8	1	
21	910100300036	螺栓GB5783-M10x25-8.8	Bolt GB5783 M10x25-8.8	4	
22	910400500007	弹簧垫圈GB93-10	Spring washer gb93-10	4	
23	910400100007	平垫圈GB97.1-10-200HV	Washer GB97.1-10-200HV	4	
24	255015010004	支架焊合	Bracket welded	1	

256898501018 转向桥及安装-KD/STEERING BRIDGE AND INSTALLATION-KD

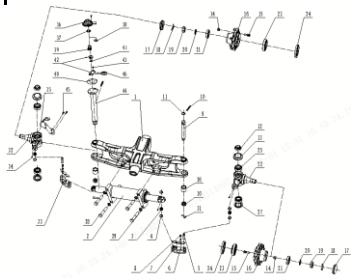

序号/NO	编码/SN	名称	Name	数量/QTY	备注/Remark
A	256816011001	30Q转向桥(KD)	30Q steering axle(KD)	1	普通桥
A	256816012001	30Q转向桥(转角KD)	30Q steering axle(KD)	1	转弯减速桥
1	257598526001	转向桥体H-2401100-24	Turn to the bridge H-2401100-24	1	
2	257598526002	转向油缸总成CZ070050ZLG-99	Steering cylinder CZ070050ZLG-99	1	
3	257598526003	关节轴承GE16ES H-3412309-00	Knuckle bearingGE16ES H-3412309-00	4	
4	257598526004	关节轴承衬套H-3412301-00	Joint bearing bushingH-3412301-00	8	
5	257598526005	连杆销H-3412200-00	Link pin H-3412200-00	4	
6	257598526006	连杆H-3412100-00	Link H-3412100-00	2	
7	910400500006	弹簧垫圈8	Spring washer 8	4	
8	910100300020	螺栓M8x16	Bolt M8x16	4	
9	257598526009	主销GE-2404102-00	Master pinGE-2404102-00	2	
10	257598526010	销轴H-3412310-01	Pin H-3412310-01	2	
11	257598526011	O形圈D30X2.65 GB1235	O-ring D30X2.65 GB1235	2	
12	257598526012	防尘圈座GE-3412311-00	Shield block GE-3412311-00	2	
13	257598526013	防尘圈H-3412312-01	Dustband H-3412312-01	2	
14	257598526014	轮毂螺母F-3103110-00	Wheel hub nut F-3103110-00	16	
15	257598526015	轮毂螺栓H-3103202-00	Hub bolt H-3103202-00	16	
16	257598526016	转向轮毂H-3103201-00	Steering wheel hub H-3103201-00	2	
17	257598526017	轮毂盖H-3103204-00	Wheel hub cover H-3103204-00	2	
18	910600600043	开口销GB91-6.3x55	Pin GB91-6.3x55	2	
19	257498516018	开槽螺母H-3103207-00-M30x2	Slotted nut H-3103207-00-M30x2	2	
20	257498516017	垫圈30 H-3103210-00	Washer 30 H-3103210-00	2	
21	910700600003	圆锥滚子轴承30207	Bearing 30207	2	
22	257598526022	右转向节H-2404200-03	Right knuckle H-2404200-03	1	
23	256898526018	圆锥滚子轴承30211E	Bearing 30211E	2	
24	257598526024	油封85X110X12 GB9877.1-88	Seal ring85X110X12	2	
25	256898526011	圆锥滚子轴承33206	Bearing 33206	4	
26	257598526026	锁紧套H-3412313-11	Lock sleeve H-3412313-11	2	
27	257598526027	复合防尘圈H-3412314-01	Composite dust ring H-3412314-01	2	
28	257598526028	螺栓GB5783-M16X75	Bolt GB5783-M16X75	4	
29	910400500010	弹簧垫圈GB93-16	Spring washerGB93-16	4	
30	257598526030	锁紧螺母m24X2 H-3103207-01	Pin lock nut m24X2 H-3103207-01	2	

256898501018 转向桥及安装-KD/STEERING BRIDGE AND INSTALLATION-KD

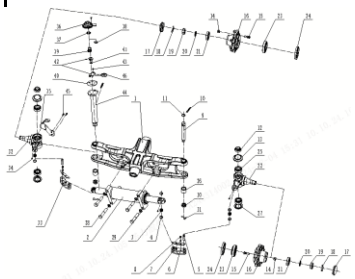

序号/NO	编码/SN	名称	Name	数量/QTY	备注/Remark
31	257598526031	开口销3.2X50 GB91-86	Pin 3.2X50 GB91-86	2	
32	257598526032	左转向节H-2404100-03	Left turn joint assembly H-2404100-21	1	
33	257498516010	挡板H-3412308-00	Baffle H-3412308-00	2	
34	254198526085	直通式压注油杯M6	Oil cap M6	6	
35	257598526035	连接支架H-2404301-28	Connecting bracket H-2404301-28	1	转弯减速桥用
36	257598526036	固定支架H-2404302-28	Fixed support H-2404302-28	1	
37	257598526037	平垫H-2404303-28	Flat pad H-2404303-28	1	
38	910401300007	轴用弹性挡圈GB894.1-16	Circlip GB894.1-16	1	
39	257598526039	转动轴H-2404304-28	Rotation axis H-2404304-28	1	
40	257598526040	密封垫H-2404305-28	Gasket H-2404305-28	1	
41	257598526041	内六角圆柱头螺钉M3*8 GB/T70. 1	hexagon socket head cap screws GB/T70.1-M3	2	
42	257498516027	传感器Vert-X05E6222 121 202 H-2404306-28	Sensor Vert-X05E6222 121 202	1	
43	257598526043	内六角圆柱头螺钉M4*8 GB/T70.1	hexagon socket head cap screws GB/T70.1-M4	2	
44	257598526044	左主销H-2404102-28	Left kingpin H-2404102-28	1	
45	910100300009	螺栓M6X12	Bolt M6X12	2	
46	257598526046	插接头JS-3-10	Connector JS-3-10	1	

256898501018 转向桥及安装(AQ）/STEERING BRIDGE AND INSTALLATION-AQ

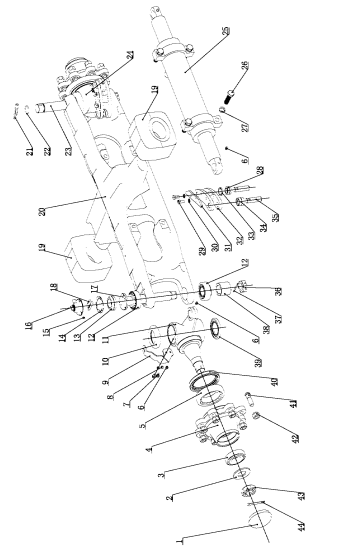

序号/NO	编码/SN	名称	Name	数量/QTY	备注/Remark
A	256816015002	3.5t转向桥总成(安庆/转角）	30Q steering axle-AQ	1	3-3.5t转弯减速桥
A	256816015001	3.5T转向桥（安庆）	3.5T steering axle-AQ	1	3-3.5t普通桥
1	256998526015	轮毂盖(1218-10200)	Hub cap (1218-10200)	2	
2	256998526013	垫圈G27Z4-30711	Gasket G27Z4-30711	2	
3	910700600003	圆锥滚子轴承30207	Bearing 30207	2	
4	256998526012	轮毂A21B4-32241	Hub A21B4-32241	2	
5	256998526011	圆锥滚子轴承30211	Bearing 30211	2	
6	256998526009	直通式油嘴M6(Q700B06)	Straight through nozzle M6(Q700B06)	6	
7	910100300009	螺栓M6X12	Bolt M6X12	2	
8	910400500005	垫圈6	Spring washer 6	2	
9	256998516030	传感器联动支架AQ-Z03N3-20201	bracket AQ-Z03N3-20201	1	转弯减速桥专用
10	256998526019	油封264973	Oil seal 264973	2	
11	256998516031	左转向节总成AQ-Z03N3-22311	Left turn joint assembly AQ-Z03N3-22311	1	转弯减速桥专用
	256998526008	左转向节总成G27Z4-33311QT	Left turn joint assembly G27Z4-33311QT	1	普通桥用
12	256898526011	轴承33206	Bearing 33206	4	
13	256998526020	隔套Z03M2-33051	Spacer sleeve Z03M2-33051	2	
14	256998516032	密封垫圈KOMV4-30231	Oil seal KOMV4-30231	1	转弯减速桥专用
	256998526006	油封G27Z4-33201	Oil seal G27Z4-33201	1	普通桥用
15	256998516033	内六角平圆头螺钉M4X6	screw M4X6	3	
16	256998516034	传感器安装盖总成A1674-32131	cover A1674-32131	1	转弯减速桥专用
17	256998516035	转向节主销AQ-Z03N3-22111	Kingpin AQ-Z03N3-22111	1	转弯减速桥专用
	256998526007	主销G27Z4-33031	Kingpin G27Z4-33031	1	普通桥用
18	256998516036	转角定位器AQ-Z03N3-40291	sensorAQ-Z03N3-40291	1	转弯减速桥专用
19	255016020001	缓冲垫 H24N4-32451	cushion H24N4-32451	2	
20	256998526001	铸造转向桥体Z03M2-10200MKSA	Cast steering axle Z03M2-10200MKSA	1	
21	256998526021	槽销9.5X57(226986B)	Slot Pin 9.5X57(226986B)	2	
22	255098524010	O型密封圈25x2.65(Z6053-02502)	O-ring 25x2.65(Z6053-02502)	2	
23	256998526007	主销G27Z4-33031	Kingpin G27Z4-33031	1	
24	256998526028	右转向节总成G27Z4-33301QT	Right steering knuckle assembly G27Z4-33301Q	1	
25	256998526027	转向油缸Z03M2-10400	Steering cylinder Z03M2-10400	1	
26	910100300065	螺栓M14X50	Bolt M14X50	4	
27	910400500009	弹垫14	Spring washer 14	4	

256898501018 转向桥及安装(转弯减速-AQ）/STEERING BRIDGE AND INSTALLATION-AQ

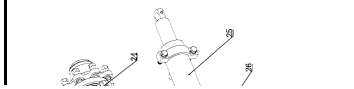

序号/NO	编码/SN	名称	Name	数量/QTY	备注/Remark
28	256998526025	向心关节轴承GE16ES	Radial joint bearing GE16ES	4	
29	910100300020	螺栓M8x16	Bolt M8x16	4	
30	910400500006	垫圈8	Spring washer 8	4	
31	256998526023	挡板A21B4-32081B	Baffle A21B4-32081B	2	

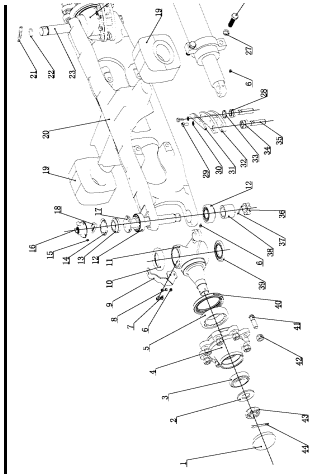

32	256998526026	连杆A21B4-32081B	Connecting rod A21B4-32081B	2	
33	256998526024	衬套H24C4-12003	Bush H24C4-12003	2	
34	256998526018	向心关节轴承Z-GE16ES-K27	Radial joint bearing Z-GE16ES-K27	2	
35	256998526022	连杆销A21B4-32261AB	Connecting rod pin A21B4-32261AB	2	
36	256998526003	开槽螺母249289	Slotted nut 249289	2	
37	910600600032	开口销3.2x40(15225)	Pin 3.2x40(15225)	2	
38	256998526005	衬套G27Z4-33071	Bush G27Z4-33071	2	
39	256998526006	油封G27Z4-33201	Oil seal G27Z4-33201	2	
40	256998526010	U型密封圈B85X110X12D(Z6031-08524)	U-shaped sealing ring B85X110X12D(Z6031-08	2	
41	256998526017	轮毂螺栓23654-32041B	Hub bolt 23654-32041B	16	
42	256998526016	轮毂螺母23654-34051B	Hub nut 23654-34051B	16	
43	256998526014	开槽螺母M30X2(A21B4-32311)	Slotted nut M30X2(A21B4-32311)	2	
44	910600600042	销6.3X50	Pin 6.3X50	2	

256898501019 转向油缸~AQ(KD)/STEERING CYLINDER-AQ(KD)

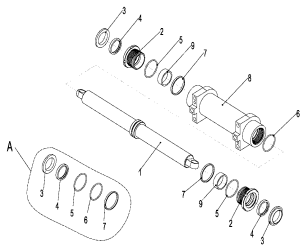

序号/NO	编码/SN	名称	Name	数量/QTY	备注/Remark
A	256998510007	密封件修理包(转向缸-AQ)	Sealing part maintenance package (steering cyli	1	
A	256898510007	密封件修理包(转向缸-KD)	Sealing part maintenance package (steering cyli	1	
1	▲	活塞杆总成	Piston rod assembly	1	
2	▲	缸盖	Cylinder cover	2	
3	▲	防尘圈	Dust ring	2	
4	▲	U形圈	U rin	2	
5	▲	O形圈	O-ring	2	
6	▲	O形圈	O-ring	1	
7	▲	支承环	Support ring	1	
8	▲	缸筒总成	Cylinder assembly	1	
9	▲	钢背轴承	Bearing	2	

256898501020 座椅盖板安装/SEAT COVER MOUNTING

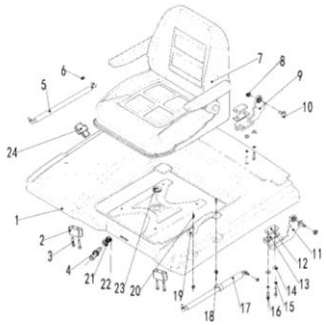

序号/NO	编码/SN	名称	Name	数量/QTY	备注/Remark
1	256821011002	箱盖焊合	Welding of box cover	1	
2	257521021032	机罩支撑垫	support pad	2	
3	910200200039	螺钉GB70.1-M6x30-8.8	Screw GB70.1-M6x30-8.8	4	
4	255021020052	锁舌	dead bolt	1	
5	940400100030	气弹簧200N(D620)	Gas spring 200N (D620)	1	
6	910300500004	螺母GB889.1-M8-10	Nut GB889.1-M8-10	2	
7	256937511002	座椅AH1-1ABC	Seat BF1-ABC (STD.)	1	
7	256937511003	座椅AH2-2A	SeatAH2-2A	1	选装/Optional
7	256937511004	座椅AH2-3AB	Seat (Vibration)	1	选装/Optional
8	910700900001	关节轴承GE12E	Bearing GB9163-GE12E	2	
9	255021010006	铰链焊合(右)	Hinge bracket (right)	1	
10	255021020043	固定螺栓	Bolt	2	
11	255021010005	铰链焊合(左)	Hinge bracket (left)	1	
12	255021020045	座板	Wire plate	2	
13	255021020054	调整垫	Adjust the gasket	2	
14	910400100006	平垫圈GB97.1-8-200HV	Washer GB97.1-8-200HV	4	
15	910400500006	弹簧垫圈GB93-8	Spring washer GB93-8	4	
16	910100300024	螺栓GB5783-M8x30-8.8	Bolt GB5783 M8x30-8.8	4	
17	940400100031	气弹簧500N(D620)-自锁	Air spring 500N(D620)- self locking	1	
18	910300500003	螺母GB889.1-M6-10	Nut GB889.1-M6-10	2	
19	255021020020	拉手	The shake handshandle	1	
20	910200500053	螺钉GB818-M6x20-4.8	Screw GB818-M6x20-4.8	2	
21	910300500006	螺母GB889.1-M12-10	Nut GB889.1-M12-10	1	
22	910300100008	平垫圈GB97.1-12-200HV	Washer GB97.1-12-200HV	1	
23	255021020046	保护圈φ35	To protect the coil	1	
24	251198537501	座椅传感器	Seat sensor	1	

256898501021 右盖板安装/SIDE PANEL INSTALLATION

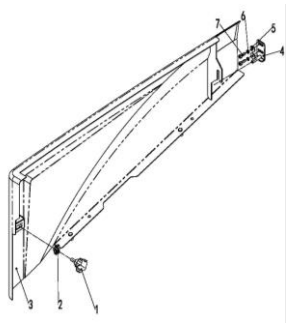

序号/NO	编码/SN	名称	Name	数量/QTY	备注/Remark
1	281223021006	盖板螺栓	Bolt	2	
2	940400400002	簧片螺母M8	Nut M8	2	
3	256821011017	侧板焊合(右)	Side plate	1	
4	255021010015	挂钩焊合(左)	Hanger	1	
5	910400100005	平垫圈GB97.1-6-200HV	Washer GB97.1-6-200HV	6	
6	910400500005	弹簧垫圈GB93-6	Spring washer GB93-6	8	
7	910200200035	螺钉GB70.1-M6x16-8.8	Screw GB70.1 M6x16-8.8	4	

256898501022 左侧板安装SIDE PANEL INSTALLATION

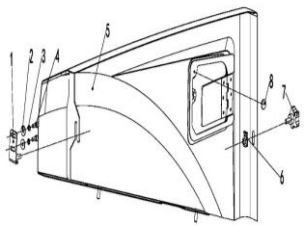

序号/NO	编码/SN	名称	Name	数量/QTY	备注/Remark
1	255021010015	挂钩焊合(左)	Side plate	1	
2	910400100005	平垫圈GB97.1-6-200HV	Hanger	1	
3	910400500005	弹簧垫圈GB93-6	Spring washer 6	1	
4	910200200035	螺钉GB70.1-M6x16-8.8	Bolt M6X16	1	
5	256821010003	侧板总成(左)	Side plate	1	
6	940400400002	簧片螺母M8	NutM8	1	
7	281223021006	盖板螺栓	Bolt	1	
8	940600100005	磁钢Φ18x3	magnet steel	1	

256898501023 仪表罩安装/INSTRUMENT COVER INSTALLATION

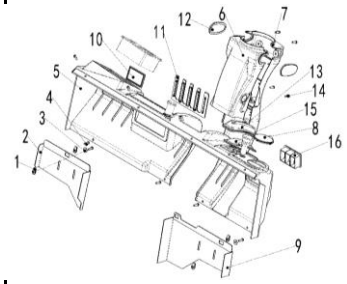

序号/NO	编码/SN	名称	Name	数量/QTY	备注/Remark
1	940400400001	板黄螺母M6-t(2-4)	Nut M6	6	
2	256821511006	盖板焊合(右)	Cover assembly	1	
3	910400200002	平垫6	Washer GB97.1-6-200HV	4	
4	941100100009	螺钉M6x12-8.8	Screw M6x12	6	
5	256810022001	仪表罩(30Q)	Instrument mask	1	
6	255010020005	前盖	Cover	1	
7	255010020006	后盖	Cover	1	
8	256810022010	制动液杯盖	Cover	1	
9	256821511004	盖板焊合(左)	Cover assembly	1	
10	256810022013	磁卡孔盖板	Cover	1	Option
11	256810022011	操纵杆孔盖板	Cover	1	
12	255010021021	管柱堵盖	Cover	1	Option
13	256810021009	手制动防尘套	dust cover	1	
14	910200500041	螺钉GB818-M5x20-4.8	Screw GB818-M5x20-4.8	2	
15	256810022012	手制动孔盖板	Cover	1	Option
16	256810011050	开关盒组合总成	Switch box	1	

256898501024 平衡重及安装/BALANCE WEIGHT AND MOUNTING

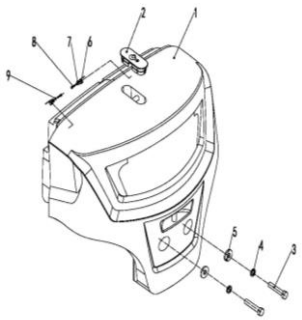

序号/NO	编码/SN	名称	Name	数量/QTY	备注/Remark
1	256723021001	平衡重(25Q)	Balance weight 25Q	1	25Q
1	256723028001	平衡重(28Q)	Balance weight 28Q	1	28Q
1	256923021001	平衡重(35Q)	Balance weight 35Q	1	35Q
1	256923021002	平衡重(30Q)	Balance weight 30Q	1	30Q
2	255023020002	装饰盖	lift hole cover	1	
3	910100100101	螺栓GB5782-M24x120-8.8	Bolt GB5782 M24x120-8.8	1	
4	910400500013	弹簧垫圈GB93-24	Spring washer GB93-24	1	
5	255023020007	垫片	Gasket Φ60XΦ25X8	2	选装
6	255023020006	调整垫(配重上)	Adjust cushion	2	
7	910100300013	螺栓GB5783-M6x30-8.8	Bolt GB5782 M24x120-8.8	2	
8	910400200002	平垫圈GB96.1-6-200HV	Washer GB97.1-6-200HV	2	
9	910400500005	弹簧垫圈GB93-6	Spring washer GB93-6	2	

256898501025 脚踏板安装/FOOT PEDAL

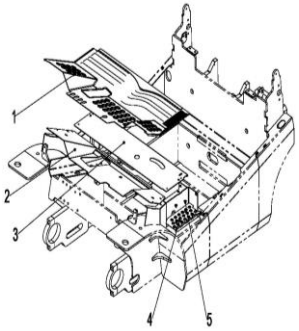

序号/NO	编码/SN	名称	Name	数量/QTY	备注/Remark
1	256818021005	地板垫(30Q)	Cushion	2	
2	256818011001	前地板焊合	Floor welding (front)	1	
3	256818011002	后地板焊合	Floor welding (rear)	1	
4	941100100001	螺钉M8X12-8.8	Screw M8x12-8.8	2	
5	256818021006	上车踏板(30Q)	Foot pedal	1	

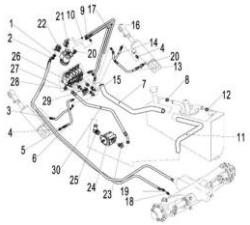

256898501026液压系统/HYDRAULIC					
序号/NO	编码/SN	名称	Name	数量/QTY	备注/Remark
1	255023520001	液压管总成(异)8-L3000-1SC-60°	Hydraulic Tube Assembly (Extraordinary)8-L300	1	
2	255023520002	液压管总成(异)8-L2700-1SC-60°	Hydraulic Tube Assembly (Extraordinary)8-L250	1	
3	256823520003	液压管总成(90°)6-L750-1SC-60°	Hydraulic Tube Assembly (90°)6-L750-1SC-60°	1	
4	255023520007	接头(直)6-G1/4－M14x1.5-60°	Connector (straight)6-G1/4 M14X1.5-60 °	3	
5	910800100021	O形圈-内11.2x2.65	O-ring - inside 11.2x2.65	4	
6	275223521006	液压管总成(90°)6-L700-1SC-60°	Hydraulic Tube Assembly (90°)6-L700-1SC-60°	1	
7	256923521006	胶管(回油)	Rubber hose (return oil)	1	
8	911000600004	喉箍QC/T390-(34-38)	Hose hoops QC/T390 - - 38 (34)	4	
9	900200401001	回油胶管23x5	Return oil hose 23X5	2560	
10	911000600003	喉箍QC/T390-(22-26)	Hose hoops QC/T390 - (22-26),	2	
11	256923521007	胶管(吸油)	Rubber hose (oil absorption)	1	
12	911000600006	喉箍QC/T390-(40-45)	Hose hoops QC/T390 - (40-45)	2	
13	256823520004	液压管总成(135°)6-L450-1SC-60°	Hydraulic Tube Assembly (135°)6-L450-1SC-60	1	
14	252123520002	液压管总成(135°)6-L600-1SC-60°	Hydraulic Tube Assembly (Straight)6-L600-1SC	1	
15	255023510012	接头(三通)7-2xM14x1.5-M16x1.5-60°	Connector (tee) 7-2XM14X1.5 - M16X1.5 -60°	2	
16	252123520011	液压管总成(90°)6-L1320-1SC-60°	Hydraulic Tube Assembly (90°)6-L1320-1SC-60	1	
17	251123521005	液压管总成(90°)8-L1320-1SC-60°	Hydraulic Tube Assembly (90°)8-L1320-1SC-60	1	
18	255023520034	接头(直)8-2xM16x1.5-60°	Connector (straight) 8-2XM16X1.5-60 °	2	
19	910800100002	O形圈-内13.2x2.65	O-ring - inside 13.2x2.65	2	
20	255023510003	接头(锁定弯)6-G1/4-M14x1.5-60°	Connector (lock bend)6-G1/4 M14X1.5 -60°	2	
21	255023510008	接头(锁定弯)11-M20x1.5-0	Connector (lock bend)11-M20x1.5-0	1	
22	255023510007	接头(锁定弯)10-M20x1.5-M16x1.5-60°	Connector (lock bend) 10-M20X1.5 - M16X1.	3	
23	255023520035	接头(锁定弯)12-G1/2-M22x1.5-60°	Connector (lock bend)12-G1/2- M22X1.5 -6	1	
24	255023510006	齿轮泵	The gear pump	1	
25	255023510005	接头(转向弯)25-G1-Φ32	Joint (to bend) 25 - G1 - Φ 32	1	
26	255023520030	接头(直)12-2xM22x1.5-60°	Connector (straight) 12-2XM22X1.5 -60°	1	
27	255023510001	接头(锁定弯)6-M12x1.5-M14x1.5-60°	Connector (lock bend) 6-M12X1.5 - M14X1.	1	
28	255044020143	接头(锁定弯)12-M20x1.5-M22x1.5-60°	Connector (lock bend)12-M20x1.5-M22x1.5-	1	
29	255023520033	接头(直)8-M20x1.5-M16x1.5-60°	Connector (straight) 8-M20X1.5 - M16X1.5	1	
30	254123520004	液压管总成(90°)13-L2600-2SC-60°	Hydraulic Tube Assembly (90°)13-L2600-2	1	

256898501027 多路换向阀操纵(二联)/MULTI-WAY REVERSING VALVE CONTROL(TWO)

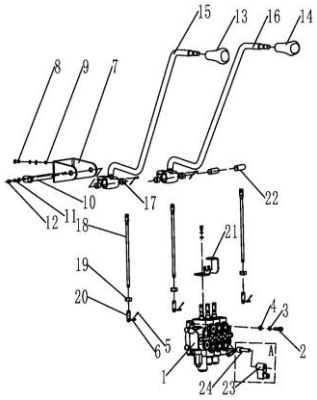

序号/NO	编码/SN	名称	Name	数量/QTY	备注/Remark
1	252024510011	多路阀(二联)	Multiple valve (two)	1	
1	256824511002	多路阀(2联电磁阀ZSX)	Multi way valve (two) solenoid valve	1	CE选配
2	910100400006	螺栓GB5786-M10x1.25x40-8.8	Bolt GB5786-M10x1.25x40-8.8	4	
3	910400500007	弹簧垫圈GB93-10	Spring washer GB93-10	8	
4	910400100007	平垫圈GB97.1-10-200HV	Washer GB97.1-10-200HV	12	
5	941100800001	销轴B4.75x20-c1B	Pin B4.75x20-c1B	4	
6	910600600011	开口销GB91-2x12	Cotter pin GB91-2x12	4	
7	252124520002	支架(阀杆)	Support (stem)	1	
8	910100300037	螺栓GB5783-M10x30-8.8	Bolt GB5783 M10x30-8.8	4	
9	910300100007	螺母GB6170-M10-10	Nut GB6170-M10-10	4	
10	255024510009	带耳轴Φ16x168	With trunnion Φ16x168	1	
11	910400500005	弹簧垫圈GB93-6	Spring washer GB93-6	1	
12	910200200032	螺钉GB70.1-M6x10-8.8	Screw GB70.1 M6x10-8.8	1	
13	253524520010	手柄球(起升)	Handle ball(lift)	1	
14	253524520009	手柄球(倾斜)	Handle ball(tilt)	1	
15	256824510002	操纵杆焊合(起升)	Joystick welding(lifting)	1	
16	256824510003	操纵杆焊合(倾斜)	Joystick welding(tilt)	1	
17	940500100006	复合套Φ16xΦ18x15-SF-1	Composite set Φ16xΦ18x15-SF-1	4	
18	256824520003	连接杆	Connecting rod	2	
19	910300100006	螺母GB6170-M8-10	Nut GB6170 M8-10	2	
20	255025020003	接头	joint	2	
21	255024520027	支架(行程开关)	Bracket (travel switch)	4	晨光
	255024521027	支架(行程开关)	Bracket (travel switch)	4	中盛兴
22	255024520028	轴套Φ29xΦ16x38	Shaft sleeveΦ29xΦ16x38	2	
A	255098511010	电磁阀(中盛兴)	Solenoid valve	1	选装
23	255098512001	电磁阀线圈(24V)-中盛兴	Solenoid coil (24V)	1	选装
24	255098512002	电磁阀阀芯-中盛兴	Solenoid valve spool	1	选装
A	255098511011	电磁阀(晨光)	Solenoid valve	1	选装
23	255098512011	电磁阀线圈(24V)-晨光	Solenoid coil (24V)	1	选装
24	255098512012	电磁阀阀芯-晨光	Solenoid valve spool	1	选装

256898501028 多路换向阀操纵(三联)MULTI-WAY REVERSING VALVE CONTROL(THREE)

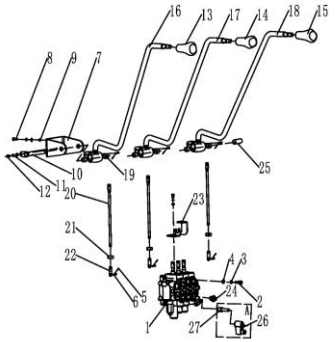

序号/NO	编码/SN	名称	Name	数量/QTY	备注/Remark
1	252025010011	多路阀(三联)	Multiple valve(three)	1	
1	256825011002	多路阀(3联电磁阀ZSX)	Multi way valve (three) solenoid valve	1	CE选配
2	910100400006	螺栓GB5786-M10x1.25x40-8.8	Bolt GB5786-M10x1.25x40-8.8	4	
3	910400500007	弹簧垫圈GB93-10	Spring washer GB93-10	8	
4	910400100007	平垫圈GB97.1-10-200HV	Washer GB97.1-10-200HV	12	
5	941100800001	销轴B4.75x20-c1B	Pin B4.75x20-c1B	6	
6	910600600011	开口销GB91-2x12	Cotter pin GB91-2x12	6	
7	252124520002	支架(阀杆)	Support (stem)	1	
8	910100300037	螺栓GB5783-M10x30-8.8	Bolt GB5783 M10x30-8.8	4	
9	910300100007	螺母GB6170-M10-10	Nut GB6170-M10-10	4	
10	255024510009	带耳轴Φ16x168	With trunnion Φ16x168	1	
11	910400500005	弹簧垫圈GB93-6	Spring washer GB93-6	1	
12	910200200032	螺钉GB70.1-M6x10-8.8	Screw GB70.1 M6x10-8.8	1	
13	253524520010	手柄球(起升)	Handle ball(lift)	1	
14	253524520009	手柄球(倾斜)	Handle ball(tilt)	1	
15	253525020002	手柄球(属具1)	Handle ball(belonging to 1)	1	
16	256824510002	操纵杆焊合(起升)	Joystick welding(lifting)	1	
17	256824510003	操纵杆焊合(倾斜)	Joystick welding(tilt)	1	
18	256825010004	操纵杆焊合(属具1)	Joystick welding(tool1)	1	
19	940500100006	复合套Φ16xΦ18x15-SF-1	Composite setΦ16xΦ18x15-SF-1	6	
20	256824520003	连接杆	Connecting rod	3	
21	910300100006	螺母GB6170-M8-10	Nut GB6170 M8-10	3	
22	255025020003	接头	joint	3	
23	255024520027	支架(行程开关)	Bracket (travel switch)	4	晨光
	255024521027	支架(行程开关)	Bracket (travel switch)	4	中盛兴
24	255023520033	接头(直)8-M20x1.5-M16x1.5-60°	Joint (straight) 8-M20x1.5-M16x1.5-60°	2	
25	255024520028	轴套Φ29xΦ16x38	Shaft sleeve Φ16xΦ29x38	1	
A	255098511010	电磁阀一中盛兴	Solenoid valve	1	选装
26	255098512001	电磁阀线圈(24V)--中盛兴	Solenoid coil (24V)	1	选装
27	255098512002	电磁阀阀芯一中盛兴	Solenoid valve spool	1	选装
A	255098511011	电磁阀(晨光)	Solenoid valve	1	选装
26	255098512011	电磁阀线圈(24V)-晨光	Solenoid coil (24V)	1	选装
27	255098512012	电磁阀阀芯-晨光	Solenoid valve spool	1	选装

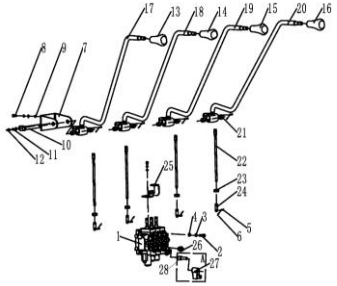

256898501029 多路换向阀操纵(四联)MULTI-WAY REVERSING VALVE CONTROL(TOUR)					
序号/NO	编码/SN	名称	Name	数量/QTY	备注/Remark
1	252025510011	多路阀(四联)	Multiway valve (four)	1	
1	256825511002	多路阀(4联电磁阀ZSX)	Multi way valve (four) solenoid valve	1	CE选配
2	910100400006	螺栓GB5786-M10x1.25x40-8.8	Bolt GB5786-M10x1.25x40-8.8	4	
3	910400500007	弹簧垫圈GB93-10	Spring washer GB93-10	8	
4	910400100007	平垫圈GB97.1-10-200HV	Washer GB97.1-10-200HV	12	
5	941100800001	销轴B4.75x20-c1B	Pin B4.75x20-c1B	8	
6	910600600011	开口销GB91-2x12	Cotter pin GB91-2x12	8	
7	252124520002	支架(阀杆)	Support (stem)	1	
8	910100300037	螺栓GB5783-M10x30-8.8	Bolt GB5783 M10x30-8.8	4	
9	910300100007	螺母GB6170-M10-10	Nut GB6170-M10-10	4	
10	255024510009	带耳轴Φ16x168	With trunnion Φ16x168	1	
11	910400500005	弹簧垫圈GB93-6	Spring washer GB93-6	1	
12	910200200032	螺钉GB70.1-M6x10-8.8	Screw GB70.1 M6x10-8.8	1	
13	253524520010	手柄球(起升)	Handle ball (lift)	1	
14	253524520009	手柄球(倾斜)	Handle ball (tilt)	1	
15	253525020002	手柄球(属具1)	Handle ball (belonging to1)	1	
16	253525520002	手柄球(属具2)	Handball (belonging to 2)	1	
17	256824510002	操纵杆焊合(起升)	Joystick welding (lifting)	1	
18	256824510003	操纵杆焊合(倾斜)	Joystick welding (tilt)	1	
19	256825010004	操纵杆焊合(属具1)	Joystick welding (tool 1)	1	
20	256825510005	操纵杆焊合(属具2)	Joystick welding (kit 2)	1	
21	940500100006	复合套Φ16xΦ18x15-SF-1	Composite set Φ16xΦ18x15-SF-1	8	
22	256824520003	连接杆	Connecting rod	4	
23	910300100006	螺母GB6170-M8-10	Nut GB6170 M8-10	4	
24	255025020003	接头	joint	4	
25	255024520027	支架(行程开关)	Bracket (travel switch)	4	晨光
	255024521027	支架(行程开关)	Bracket (travel switch)	4	中盛兴
26	255023520033	接头(直)8-M20x1.5-M16x1.5-60°	Joint (straight)8-M20x1.5-M16x1.5-60°	4	
A	255098511010	电磁阀—中盛兴	Solenoid valve	1	选装
27	255098512001	电磁阀线圈(24V)--中盛兴	Solenoid coil (24V)	1	选装
28	255098512002	电磁阀阀芯—中盛兴	Solenoid valve spool	1	选装
A	255098511011	电磁阀(晨光)	Solenoid valve	1	选装
27	255098512011	电磁阀线圈(24V)-晨光	Solenoid coil (24V)	1	选装
28	255098512012	电磁阀阀芯-晨光	Solenoid valve spool	1	选装

256898501030 工作油箱装置及安装/WORK TANK INSTALLATION AND INSTALLATION

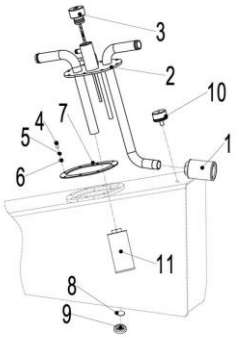

序号/NO	编码/SN	名称	Name	数量/QTY	备注/Remark
1	255019010004	网式过滤器	Mesh filter	1	
2	256919011002	箱盖焊合	Lid welded	1	没带回油滤芯用此代码
2	256919011001	油箱盖板焊合	Tank cover welded	1	带回油滤芯用此代码
3	251119010003	油尺塞总成	Oil ruler plug assembly	1	
4	910100300022	螺栓GB5783-M8x20-8.8	Bolt GB5783 M8x20-8.8	8	
5	910400500006	弹簧垫圈GB93-8	Spring washer GB93-8	8	
6	910400100006	平垫圈GB97.1-8-200HV	Washer GB97.1-8-200HV	8	
7	255019020013	密封垫204x134x1.5-R	Gasket 204x134x1.5-R	1	
8	910800900001	组合垫圈JB982-20	Combination washer JB982-20	1	
9	255019020015	放油塞M20x1.5	Drain plug M20x1.5	1	
10	253519010005	呼吸器HS0403	Respirator HS0403	1	
11	256919021020	回油滤芯Y0917	Return oil filter Y0917	1	

256898501031车架装配/FRAME ASSEMBLY

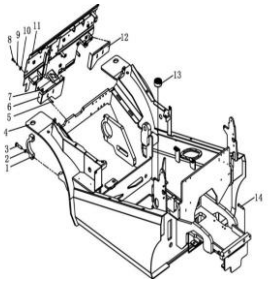

序号/NO	编码/SN	名称	Name	数量/QTY	备注/Remark
1	256821521032	支承盖	Support cover	2	
2	910400500010	弹簧垫圈GB93-16	Spring washer GB93-16	4	
3	910100200016	螺栓GB5785-M16x1.5x70-8.8	Bolt GB5785-M16x1.5x70-8.8	4	
4	256721511001	车架焊合(25Q)	Frame welded	1	25Q
4	256721518001	车架焊合(28Q)	Frame welded	1	28Q
4	256921511001	车架焊合(30Q	Frame welded	1	30-35Q
5	910200300018	螺钉GB70.2-M6x16-8.8	Screw GB70.2 M6x16-8.8	4	
6	256821511004	盖板焊合(左)	Welding of cover plate(left)	1	
7	940400400001	板簧螺母M6	Leaf spring nut M6	4	
8	910100300037	螺栓GB5783-M10x30-8.8	Bolt GB5783-M10x30-8.8	2	
9	910400500007	弹簧垫圈GB93-10	Spring washer GB93-10	2	
10	910400200004	大垫圈GB96.1-10-200HV	Large washer GB96.1-10-200HV	2	
11	256821511009	仪表架焊合	The meter stand is welded together	1	
12	256821511006	盖板焊合(右)	Welding of cover plate (right)	1	
13	256821521095	减振垫	Damping pad	4	
14	910200200104	螺钉GB70.1-M12x60-8.8	Screw GB70.1 M12x60-8.8	2	

256898501032 护顶架装配/TOP GUARD ASSEMBLY

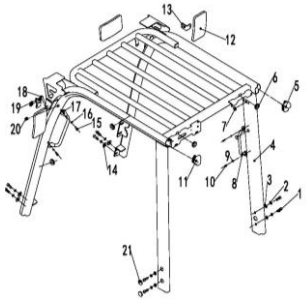

序号/NO	编码/SN	名称	Name	数量/QTY	备注/Remark
1	910200200098	螺钉GB70.1-M12x30-8.8	Screw GB70.1 M12x30-8.8	8	
2	910400500008	弹簧垫圈GB93-12	Spring washer GB93-12	8	
3	910400100008	平垫圈GB97.1-12-200HV	The flat washer GB97.1-12-200HV	4	
4	256822012001	护顶架焊合	The top guard is welded together	1	
5	255022020001	防护罩一(异型管)	Protective cover 1	1	
6	255022020004	尾灯出线圈	Protective tape	4	
7	252022020050	充电插座线垫圈	Protective tape	2	
8	255056510001	后把手开关	Back handle	1	选装
9	910400500005	弹簧垫圈GB93-6	Spring washer GB93-6	2	
10	910200200036	螺钉GB70.1-M6x20-8.8	Screw GB70.1 M6x20-8.8	2	
11	255022020002	防护罩二(异型管)	Protective cover 2	1	
12	255049520010	内后视镜EQ-105	Rearview mirror	3	
13	255049520004	支架(外双镜)	Support	2	
14	910400200005	大垫圈GB96.1-12-200HV	Big washer GB96.1-12-200HV	4	
15	910200200057	螺钉GB70.1-M8x20-8.8	Screw GB70.1 M8x20-8.8	2	
16	910400500006	弹簧垫圈GB93-8	Spring washer GB93-8	2	
17	255022020029	把手	Handle	1	选装
18	910300500004	螺母GB889.1-M8-10	Nut GB889.1-M8-10	4	
19	910100300022	螺栓GB5783-M8x20-8.8	Bolt GB5783 M12x20-8.8	4	
20	255022020003	大灯穿线圈	Protective tape	2	
21	253522020024	孔塞30	Cover 30	4	

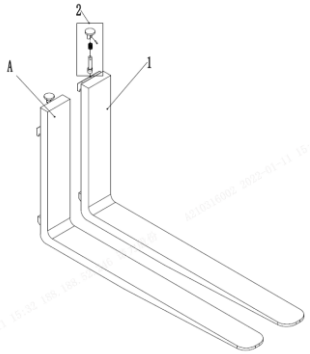

256898501034货叉/FORK					
序号/NO	编码/SN	名称	Name	数量/QTY	备注/Remark
A	940100100008	挂钩ⅡA型货叉120x40x1070	Fork 120x40x1070	2	2.5t
A	940100100010	挂钩ⅡA型货叉120x40x1150	Fork 120x40x1150	2	2.5t
A	940100100009	挂钩ⅡA型货叉120x40x1220	Fork 120x40x1220	2	2.5t
A	940100100011	挂钩ⅡA型货叉120x40x1370	Fork 120x40x1370	2	2.5t
A	940100100012	挂钩ⅡA型货叉120x40x1520	Fork 120x40x1520	2	2.5t
A	940100100030	挂钩ⅡA型货叉120x40x1820	Fork 120x40x1820	2	2.5t
A	940100100044	挂钩ⅡA型货叉120x40x1970	Fork 120x40x1970	2	2.5t
A	940100100046	挂钩ⅡA型货叉120x40x1670	Fork 120x40x1670	2	2.5t
A	940100100013	挂钩ⅢA型货叉125x45x1070	Fork 125x45x1070	2	2.8-3.0t
A	940100100014	挂钩ⅢA型货叉125x45x1150	Fork 125x45x1150	2	2.8-3.0t
A	940100100015	挂钩ⅢA型货叉125x45x1220	Fork 125x45x1220	2	2.8-3.0t
A	940100100016	挂钩ⅢA型货叉125x45x1370	Fork 125x45x1370	2	2.8-3.0t
A	940100100017	挂钩ⅢA型货叉125x45x1520	Fork 125x45x1520	2	2.8-3.0t
A	940100100035	挂钩ⅢA型货叉125x45x1970	Fork 125x45x1970	2	2.8-3.0t
A	940100100039	挂钩ⅢA型货叉125x45x1820	Fork 125x45x1820	2	2.8-3.0t
A	940100100041	挂钩ⅢA型货叉125x45x1670	Fork 125x45x1670	2	2.8-3.0t
A	940100100018	挂钩ⅢA型货叉125x50x1070	Fork 125x50x1070	2	3.5t-3.8t
A	940100100019	挂钩ⅢA型货叉125x50x1150	Fork 125x50x1150	2	3.5t-3.8t
A	940100100020	挂钩ⅢA型货叉125x50x1220	Fork 125x50x1220	2	3.5t-3.8t
A	940100100021	挂钩ⅢA型货叉125x50x1370	Fork 125x50x1370	2	3.5t-3.8t
A	940100100022	挂钩ⅢA型货叉125x50x1520	Fork 125x50x1520	2	3.5t-3.8t
A	940100100031	挂钩ⅢA型货叉125x50x1800	Fork 125x50x1800	2	3.5t-3.8t
A	940100100040	挂钩ⅢA型货叉125x50x1970	Fork 125x50x1970	2	3.5t-3.8t
A	940100100042	挂钩ⅢA型货叉125x50x1670	Fork 125x50x1670	2	3.5t-3.8t
1	▲	货叉体	Fork body	2	
2	253098514101	提销总成	Lift pin assembly	2	

256898501035 倾斜油缸/TILT CYLINDER（30-38Q)

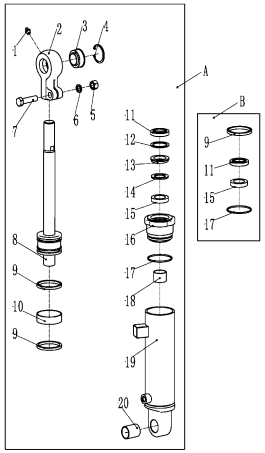

序号/NO	编码/SN	名称	Name	数量/QTY	备注/Remark
A	256820510001	油缸(TL)(TL)Φ80xΦ35x118(6/10)	Oil cylinder(TL)Φ80xΦ35x118(6/10)	1	H＜4000,Left
A	256820510002	油缸(TL)(TL)Φ80xΦ35x88.5(6/6)	Oil cylinder(TL)Φ80xΦ35x88.5(6/6)	1	4000≤H≤5000,Left
A	256820510003	油缸(TL)(TL)Φ80xΦ35x67(6/10)	Oil cylinder(TL)Φ80xΦ35x67(3/6)	1	5000＜H,Left
A	256820510005	油缸(TL)(TR)Φ80xΦ35x118(6/10)	Oil cylinder(TR)Φ80xΦ35x118(6/10)	1	H＜4000,Left
A	256820510006	油缸(TL)(TR)Φ80xΦ35x88.5(6/6)	Oil cylinder(TR)Φ80xΦ35x88.5(6/6)	1	4000≤H≤5000,Left
A	256820510007	油缸(TL)(TR)Φ80xΦ35x67(6/10)	Oil cylinder(TR)Φ80xΦ35x67(3/6)	1	5000＜H,Left
B	256198510006	密封件修理包(倾斜缸)	Seal kits (tlited cylinder)	2	
1	▲	直通式滑脂嘴Z1/8	Grease mouth Z1/8	2	不单独提供
2	▲	耳环	Earring	2	不单独提供
3	▲	关节轴承GE30ES	Bearing GE30ES	2	不单独提供
4	▲	挡圈47	Circlip 47	2	不单独提供
5	▲	螺母M14	Nut M14	2	不单独提供
6	▲	垫圈14	Washer14	2	不单独提供
7	▲	螺栓M14x55	Bolt M14x55	2	不单独提供
8	▲	活塞体总成	Piston body assembly	2	不单独提供
9	▲	Yx型密封圈	Yx seal ring	2	不单独提供
10	▲	支承环D63x20x2.5	Support ring	2	不单独提供
11	▲	防尘圈	Dust ring	2	不单独提供
12	▲	挡圈52	Circlip 52	2	不单独提供
13	▲	挡圈	Circlip	2	不单独提供
14	▲	挡片48x30x3	Catch 48x30x3	2	不单独提供
15	▲	U型密封圈	Useal ring 48x30x10	2	不单独提供
16	▲	导向套	Guide sleeve	2	不单独提供
17	▲	O型密封圈	O seal ring 63x3.1	2	不单独提供
18	▲	钢背轴承3025	Bearing 3025	2	不单独提供
19	▲	缸筒总成	Cylinder barrel assembly	2	不单独提供
20	▲	钢背轴承3040	Bearing 3040	2	不单独提供

256898501036 倾斜油缸/TILT CYLINDER（25-28Q)

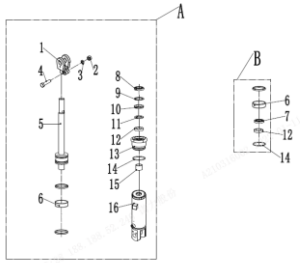

序号/NO	编码/SN	名称	Name	数量/QTY	备注/Remark
A	256720510001	油缸(TL)Φ70xΦ32x118(6/10)	Oil cylinder(TL)Φ70xΦ32x118(6/10)	1	H＜4000,Left
A	256720510002	油缸(TL)Φ70xΦ32x88.5(6/6)	Oil cylinder(TL)Φ70xΦ32x88.5(6/6)	1	4000≤H≤5000,Left
A	256720510003	油缸(TL)Φ70xΦ32x67(3/6)	Oil cylinder(TL)Φ70xΦ32x67(3/6)	1	5000＜H,Left
A	256720510005	油缸(TR)Φ70xΦ32x118(6/10)	Oil cylinder(TR)Φ70xΦ32x118(6/10)	1	H＜4000,Left
A	256720510006	油缸(TR)Φ70xΦ32x88.5(6/6)	Oil cylinder(TR)Φ70xΦ32x88.5(6/6)	1	4000≤H≤5000,Left
A	256720510007	油缸(TR)Φ70xΦ32x67(3/6)	Oil cylinder(TR)Φ70xΦ32x67(3/6)	1	5000＜H,Left
B	255098510006	密封件修理包(倾斜缸)	Seal kits (tlited cylinder)	2	
1	▲	耳环	Earring	2	不单独提供
2	▲	螺母M14	NutM14	2	不单独提供
3	▲	垫圈14	Washer14	2	不单独提供
4	▲	螺栓M14x55	BoltM14x55	2	不单独提供
5	▲	活塞杆	Piston rod	1	不单独提供
6	▲	支承环D63x20x2.5	Support ring D60x20x2.5	2	不单独提供
7	▲	Yx型密封圈D63X60X6	Yx seal ring D63x60x6	2	不单独提供
8	▲	防尘圈	Dust ring	2	不单独提供
9	▲	挡圈47	Circlip 47	2	不单独提供
10	▲	挡圈	Circlip	2	不单独提供
11	▲	挡片48x30x3	Catch 48x30x3	2	不单独提供
12	▲	U型密封圈	Useal ring 48x30x10	2	不单独提供
13	▲	导向套	Guide sleeve	2	不单独提供
14	▲	O型密封圈63x3.1	O seal ring 63x3.1	2	不单独提供
15	▲	钢背轴承3025	Bearing 3025	2	不单独提供
16	▲	缸筒总成	Cylinder barrel assembly	2	不单独提供

256898501037 门架(标准门架25-28Q)/MAST(stand mast 25-28Q)

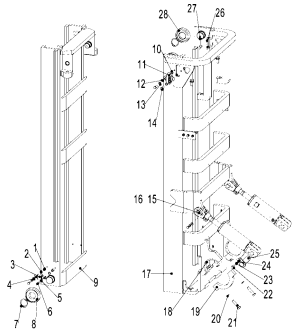

序号/NO	编码/SN	名称	Name	数量/QTY	备注/Remark
1	255038020008	调整套	Adjusting sleeve	4	
2	255038020009	调整垫	Adjustable pad	8	
3	940200200005	侧滚轮Φ42-CD=68	Side rollerΦ42 - CD = 68	2	
4	910400100007	平垫圈GB97.1-10-200HV	Washer GB97.1-10-200HV	8	
5	910400500007	弹簧垫圈GB93-10	Spring washer GB93-10	8	
6	910100300039	螺栓GB5783-M10x40-8.8	Bolt GB5783 M10x40-8.8	4	
7	910401300020	轴用弹性挡圈GB894.1-40	Elastic retaining ring GB894.1-40 for shaft	4	
8	940200100020	主滚轮Φ119.2xΦ55x34	Roller Φ119.2xΦ55x34	2	选配
8	940200100021	主滚轮Φ119.6xΦ55x34	Roller Φ119.6xΦ55x34	2	选配
8	940200100022	主滚轮Φ120xΦ55x34	Roller Φ120xΦ55x34	2	选配
9	256744012001	内门架焊合(2000)	Mast (2000)	1	2.5t
9	256744012002	内门架焊合(2500)	Mast (2500)	1	2.5t
9	256744012003	内门架焊合(3000)	Mast (3000)	1	2.5t
9	256744012004	内门架焊合(3300)	Mast (3300)	1	2.5t
9	256744012005	内门架焊合(3500)	Mast (3500)	1	2.5t
9	256744012006	内门架焊合(3600)	Mast (3600)	1	2.5t
9	256744012007	内门架焊合(3700)	Mast (3700)	1	2.5t
9	256744012008	内门架焊合(4000)	Mast (4000)	1	2.5t
9	256744012009	内门架焊合(4300)	Mast (4300)	1	2.5t
9	256744012010	内门架焊合(4500)	Mast (4500)	1	2.5t
9	256744012011	内门架焊合(5000)	Mast (5000)	1	2.5t
9	256744012012	内门架焊合(5500)	Mast (5500)	1	2.5t
9	256744012013	内门架焊合(6000)	Mast (6000)	1	2.5t
9	256844012001	内门架焊合(2000)	Mast (2000)	1	2.8t
9	256844012002	内门架焊合(2500)	Mast (2500)	1	2.8t
9	256844012003	内门架焊合(3000)	Mast (3000)	1	2.8t
9	256844012004	内门架焊合(3300)	Mast (3300)	1	2.8t
9	256844012005	内门架焊合(3500)	Mast (3500)	1	2.8t
9	256844012006	内门架焊合(3600)	Mast (3600)	1	2.8t
9	256844012007	内门架焊合(3700)	Mast (3700)	1	2.8t
9	256844012008	内门架焊合(4000)	Mast (4000)	1	2.8t

256898501037 门架(标准门架25-28Q)/MAST(stand mast25-28Q)

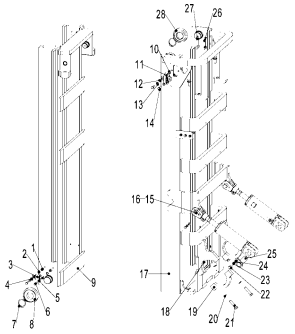

序号/NO	编码/SN	名称	Name	数量/QTY	备注/Remark
9	256844012009	内门架焊合(4300）	Mast (4300)	1	2.8t
9	256844012010	内门架焊合(4500）	Mast (4500)	1	2.8t
9	256844012011	内门架焊合(5000）	Mast (5000)	1	2.8t
9	256844012012	内门架焊合(5500）	Mast (5500)	1	2.8t
9	256844012013	内门架焊合(6000）	Mast (6000)	1	2.8t
10	255038020009	调整垫	Adjustable pad	4	
11	940200200002	侧滚轮Φ87-CD=55	Side roller Φ87-CD=55	2	
12	910400100008	平垫圈GB97.1-12-200HV	Washer GB97.1-12-200HV	4	
13	910400500008	弹簧垫圈GB93-12	Washer GB93-12	6	
14	910100300050	螺栓GB5783-M12x30-8.8	Bolt GB5783-M12x30-8.8	4	
15	256844510001	带耳轴Φ30x94	AxleΦ30x94	2	
16	272344021080	耐磨套Φ30xΦ38x25	the wear-proof casing	2	
17	256744011001	外门架焊合(2000)	Mast (2000)	1	
17	256744011002	外门架焊合(2500)	Mast (2500)	1	
17	256744011003	外门架焊合(3000)	Mast (3000)	1	
17	256744011004	外门架焊合(3300)	Mast (3300)	1	
17	256744011005	外门架焊合(3500)	Mast (3500)	1	
17	256744011006	外门架焊合(3600)	Mast (3600)	1	
17	256744011007	外门架焊合(3700)	Mast (3700)	1	
17	256744011008	外门架焊合(4000)	Mast (4000)	1	
17	256744011009	外门架焊合(4300)	Mast (4300)	1	
17	256744011010	外门架焊合(4500)	Mast (4500)	1	
17	256744011011	外门架焊合(5000)	Mast (5000)	1	
17	256744011012	外门架焊合(5500)	Mast (5500)	1	
17	256744011013	外门架焊合(6000)	Mast (6000)	1	
18	254144020063	轴瓦	Bearing bush	2	
19	255044020005	支座盖	Bearing cover	2	
20	910400500010	弹簧垫圈GB93-16	Washer GB93-16	6	
21	910100200016	螺栓GB5785-M16x1.5x70-8.8	Bolt GB5785-M16x1.5x70-8.8	4	
22	910100300035	螺栓GB5783-M10x20-8.8	Bolt GB5783-M10x20-8.8	4	
23	910400100007	平垫圈GB97.1-10-200HV	Washer GB97.1-10-200HV	8	

256898501037 门架(标准门架25-28Q)/MAST(stand mast25-28Q)

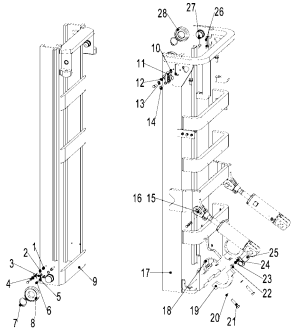

序号/NO	编码/SN	名称	Name	数量/QTY	备注/Remark
24	910400500007	弹簧垫圈GB93-10	Washer GB93-10	8	
25	255044010057	带耳轴Φ30x82	AxleΦ30x82	2	
26	255044020132	调整垫片t=0.8	Adjusting pad t=0.8	2	
26	255044020133	调整垫片t=0.5	Adjusting pad t=0.5	2	
26	255044020134	调整垫片t=0.2	Adjusting pad t=0.2	2	
27	255044020131	垫板	Base plate	2	
28	940200100024	主滚轮Φ111xΦ55x32	Roller Φ111xΦ55x32	2	

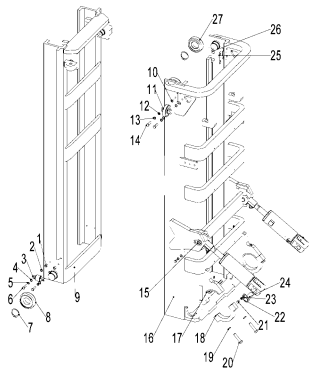

256898501038 门架(标准门架30-38Q)/MAST(stand mast30-38Q)

序号/NO	编码/SN	名称	Name	数量/QTY	备注/Remark
1	255038020008	调整套	Adjusting sleeve	4	
2	255038020009	调整垫	Adjustable pad	8	
3	940200200005	侧滚轮Φ42-CD=68	Side rollerΦ42 - CD = 68	2	
4	910400100007	平垫圈GB97.1-10-200HV	Washer GB97.1-10-200HV	8	
5	910400500007	弹簧垫圈GB93-10	Spring washer GB93-10	8	
6	910100300039	螺栓GB5783-M10x40-8.8	Bolt GB5783 M10x40-8.8	4	
7	910401300020	轴用弹性挡圈GB894.1-40	Elastic retaining ring GB894.1-40 for shaft	4	
8	940200100020	主滚轮Φ119.2xΦ55x34	Roller Φ119.2xΦ55x34	2	
8	940200100021	主滚轮Φ119.6xΦ55x34	Roller Φ119.6xΦ55x34	2	
8	940200100022	主滚轮Φ120xΦ55x34	Roller Φ120xΦ55x34	2	
9	256844012001	内门架焊合(2000)	Inner Mast (2000)	1	3.0t
9	256844012002	内门架焊合(2500)	Inner Mast (2500)	1	3.0t
9	256844012003	内门架焊合(3000)	Inner Mast (3000)	1	3.0t
9	256844012004	内门架焊合(3300)	Inner Mast (3300)	1	3.0t
9	256844012005	内门架焊合(3500)	Inner Mast (3500)	1	3.0t
9	256844012006	内门架焊合(3600)	Inner Mast (3600)	1	3.0t
9	256844012007	内门架焊合(3700)	Inner Mast (3700)	1	3.0t
9	256844012008	内门架焊合(4000)	Inner Mast (4000)	1	3.0t
9	256844012009	内门架焊合(4300)	Inner Mast (4300)	1	3.0t
9	256844012010	内门架焊合(4500)	Inner Mast (4500)	1	3.0t
9	256844012011	内门架焊合(5000)	Inner Mast (5000)	1	3.0t
9	256844012012	内门架焊合(5500)	Inner Mast (5500)	1	3.0t
9	256844012013	内门架焊合(6000)	Inner Mast (6000)	1	3.0t
9	256844012051	内门架焊合(2000)	Inner mast(2000)	1	3.5t-3.8t
9	256844012052	内门架焊合(2500)	Inner mast(2500)	1	3.5t-3.8t
9	256844012053	内门架焊合(3000)	Inner mast(2700)	1	3.5t-3.8t
9	256844012054	内门架焊合(3300)	Inner mast(3000)	1	3.5t-3.8t
9	256844012055	内门架焊合(3500)	Inner mast(3300)	1	3.5t-3.8t
9	256844012056	内门架焊合(3600)	Inner mast(3500)	1	3.5t-3.8t
9	256844012057	内门架焊合(3700)	Inner mast(3700)	1	3.5t-3.8t
9	256844012058	内门架焊合(4000)	Inner mast(4000)	1	3.5t-3.8t

256898501038 门架(标准门架30-38Q)/MAST(stand mast30-38Q)

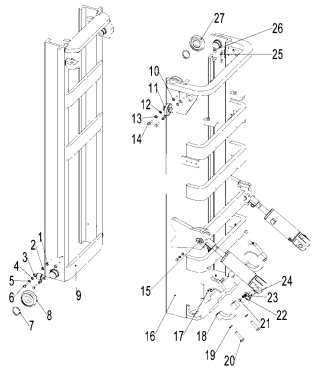

序号/NO	编码/SN	名称	Name	数量/QTY	备注/Remark
9	256844012059	内门架焊合(4300)	Inner mast(4300)	1	3.5t-3.8t
9	256844012060	内门架焊合(4500)	Inner mast(4500)	1	3.5t-3.8t
9	256844012061	内门架焊合(5000)	Inner mast(5000)	1	3.5t-3.8t
9	256844012062	内门架焊合(5500)	Inner mast(5500)	1	3.5t-3.8t
9	256844012063	内门架焊合(6000)	Inner mast(6000)	1	3.5t-3.8t
10	255038020009	调整垫	Adjustable pad	4	
11	940200200002	侧滚轮Φ87-CD=55	Side roller Φ87-CD=55	2	
12	910400100008	平垫圈GB97.1-12-200HV	Washer GB97.1-12-200HV	4	
13	910400500008	弹簧垫圈GB93-12	Washer GB93-12	6	
14	910100300050	螺栓GB5783-M12x30-8.8	Bolt GB5783-M12x30-8.8	4	
15	256844510001	带耳轴Φ30x94	AxleΦ30x94	2	
16	256844011001	外门架焊合(2000)	Outer mast(2000)	1	3.0t
16	256844011002	外门架焊合(2500)	Outer mast(2500)	1	3.0t
16	256844011003	外门架焊合(3000)	Outer mast(3000)	1	3.0t
16	256844011004	外门架焊合(3300)	Outer mast(3300)	1	3.0t
16	256844011005	外门架焊合(3500)	Outer mast(3500)	1	3.0t
16	256844011006	外门架焊合(3600)	Outer mast(3600)	1	3.0t
16	256844011007	外门架焊合(3700)	Outer mast(3700)	1	3.0t
16	256844011008	外门架焊合(4000)	Outer mast(4000)	1	3.0t
16	256844011009	外门架焊合(4300)	Outer mast(4300)	1	3.0t
16	256844011010	外门架焊合(4500)	Outer mast(4500)	1	3.0t
16	256844011011	外门架焊合(5000)	Outer mast(5000)	1	3.0t
16	256844011012	外门架焊合(5500)	Outer mast(5500)	1	3.0t
16	256844011013	外门架焊合(6000)	Outer mast(6000)	1	3.0t
16	256844011051	外门架焊合(2000)	Outer mast(2000)	1	3.5t-3.8t
16	256844011052	外门架焊合(2500)	Outer mast(2500)	1	3.5t-3.8t
16	256844011053	外门架焊合(3000)	Outer mast(3000)	1	3.5t-3.8t
16	256844011054	外门架焊合(3300)	Outer mast(3300)	1	3.5t-3.8t
16	256844011055	外门架焊合(3500)	Outer mast(3500)	1	3.5t-3.8t
16	256844011056	外门架焊合(3600)	Outer mast(3600)	1	3.5t-3.8t
16	256844011057	外门架焊合(3700)	Outer mast(3700)	1	3.5t-3.8t

256898501038 门架(标准门架30-38Q)/MAST(stand mast30-38Q)

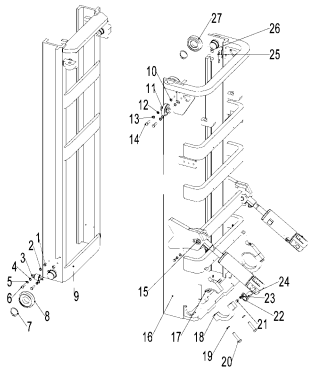

序号/NO	编码/SN	名称	Name	数量/QTY	备注/Remark
16	256844011058	外门架焊合(4000)	Outer mast(4000)	1	3.5t-3.8t
16	256844011059	外门架焊合(4300)	Outer mast(4300)	1	3.5t-3.8t
16	256844011060	外门架焊合(4500)	Outer mast(4500)	1	3.5t-3.8t
16	256844011061	外门架焊合(5000)	Outer mast(5000)	1	3.5t-3.8t
16	256844011062	外门架焊合(5500)	Outer mast(5500)	1	3.5t-3.8t
16	256844011063	外门架焊合(6000)	Outer mast(6000)	1	3.5t-3.8t
17	254144020063	轴瓦	Bearing bush	2	
18	255044020005	支座盖	Bearing cover	2	
19	910400500010	弹簧垫圈GB93-16	Washer GB93-16	6	
20	910100200016	螺栓GB5785-M16x1.5x70-8.8	Bolt GB5785-M16x1.5x70-8.8	4	
21	910100300035	螺栓GB5783-M10x20-8.8	Bolt GB5783-M10x20-8.8	4	
22	910400100007	平垫圈GB97.1-10-200HV	Washer GB97.1-10-200HV	8	
23	910400500007	弹簧垫圈GB93-10	Washer GB93-10	8	
24	255044010057	带耳轴Φ30x82	AxleΦ30x82	2	
25	255044020132	调整垫片t=0.8	Adjusting pad t=0.8	2	
25	255044020133	调整垫片t=0.5	Adjusting pad t=0.5	2	
25	255044020134	调整垫片t=0.2	Adjusting pad t=0.2	2	
26	255044020131	垫板	Base plate	2	
27	940200100024	主滚轮Φ111xΦ55x32	Roller Φ111xΦ55x32	2	

256898501039 货叉架(标准门架)/FORK ARM CARRIER(stand mast)

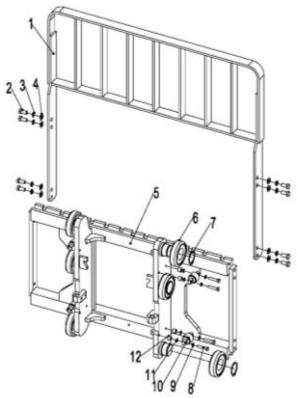

序号/NO	编码/SN	名称	Name	数量/QTY	备注/Remark
1	253540510001	挡货架焊合(1100x1080)	Load backrest welding	1	2.8-3.8t
1	255040510001	挡货架焊合(1040x986)	Load backrest welding (1040x986)	1	2.5t
2	910100300062	螺栓GB5783-M14x30-8.8	Bolt GB5783-M14x30-8.8	4	
3	910400500009	弹簧垫圈GB93-14	Washer GB93-14	4	
4	910400100009	平垫圈GB97.1-14-200HV	Washer GB97.1-14-200HV	4	
5	256738010001	货叉架焊合(标准门架）	Fork carrier weldind（standard mast）	1	2.5t
5	256838011001	货叉架焊合(标准门架）	Fork carrier weldind（standard mast）	1	2.8-3.0t
5	256838011051	货叉架焊合(标准门架35）	Fork carrier weldind（standard mast 35）	1	3.5-3.8t
6	940200100020	主滚轮Φ119.2xΦ55x34	Main roller φ119.2xφ55x34	6	选装
6	940200100021	主滚轮Φ119.6xΦ55x34	Main roller φ119.6xφ55x34	6	选装
6	940200100022	主滚轮Φ120xΦ55x34	Main roller φ120xφ55x34	6	选装
7	910401300026	轴用弹性挡圈GB894.1-55	Circlip GB894.1-55	6	
8	910100300042	螺栓GB5783-M10x60-8.8	Bolt GB5783-M10x60-8.8	8	
9	910400500007	弹簧垫圈GB93-10	Washer GB93-10	8	
10	940200200005	侧滚轮Φ42-CD=68	Side roller Φ 42 - CD = 68	4	
11	255038020009	调整垫	Adjustable pad	24	
12	255038020008	调整套	Adjusting sleeve	8	

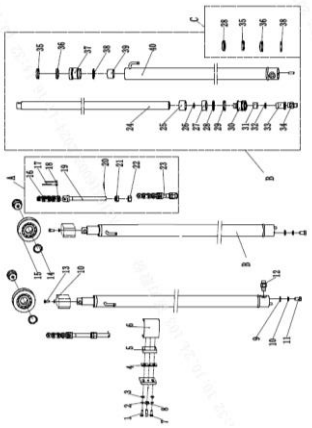

256898501040起升油缸（标准门架）/LIFTING PIPE（stand mast）					
序号/NO	编码/SN	名称	Name	数量/QTY	备注/Remark
A	255044010060	起升链条LH1623-55	Lifting chainLH1623-55	2	2.5T-3.0T-2000
A	256844014002	起升链条LH1623-65	Lifting chainLH1623-65	2	2.5T-3.0T-2500
A	255044510047	起升链条LH1623-75	Lifting chainLH1623-75	2	2.5T-3.0T-3000
A	255044510137	起升链条LH1623-81	Lifting chainLH1623-81	2	2.5T-3.0T-3300
A	255044510140	起升链条LH1623-85	Lifting chainLH1623-85	2	2.5T-3.0T-3500
A	255044010105	起升链条LH1623-87	Lifting chainLH1623-87	2	2.5T-3.0T-3600
A	255044010106	起升链条LH1623-89	Lifting chainLH1623-89	2	2.5T-3.0T-3700
A	256844014006	起升链条LH1623-97	Lifting chainLH1623-97	2	2.5T-3.0T-4000
A	255044510049	起升链条LH1623-103	Lifting chainLH1623-103	2	2.5T-3.0T-4300
A	253544510027	起升链条LH1623-107	Lifting chainLH1623-107	2	2.5T-3.0T-4500
A	256844014008	起升链条LH1623-115	Lifting chainLH1623-115	2	2.5T-3.0T-5000
A	256844014012	起升链条LH1623-129	Lifting chainLH1623-129	2	2.5T-3.0T-5500
A	256844014010	起升链条LH1623-137	Lifting chainLH1623-137	2	2.5T-3.0T-6000
A	256544515004	起升链条LH1634-59	Lifting chain LH1634-59	2	3.5-3.8T-2000
A	256544515007	起升链条LH1634-69	Lifting chain LH1634-69	2	3.5-3.8T-2500
A	256544014017	起升链条LH1634-79	Lifting chain LH1634-79	2	3.5-3.8T-3000
A	256544014013	起升链条LH1634-85	Lifting chain LH1634-85	2	3.5-3.8T-3300
A	256543515005	起升链条LH1634-89	Lifting chain LH1634-89	2	3.5-3.8T-3500
A	256544014005	起升链条LH1634-91	Lifting chain LH1634-91	2	3.5-3.8T-3600
A	256544014006	起升链条LH1634-93	Lifting chain LH1634-93	2	3.5-3.8T-3700
A	256544014008	起升链条LH1634-101	Lifting chain LH1634-101	2	3.5-3.8T-4000
A	256144014013	起升链条LH1634-107	Lifting chain LH1634-107	2	3.5-3.8T-4300
A	256144014014	起升链条LH1634-111	Lifting chain LH1634-111	2	3.5-3.8T-4500
A	256544014011	起升链条LH1634-123	Lifting chain LH1634-123	2	3.5-3.8T-5000
A	256144014011	起升链条LH1634-133	Lifting chain LH1634-133	2	3.5-3.8T-5500
A	256543515010	起升链条LH1634-143	Lifting chain LH1634-143	2	3.5-3.8T-6000
B	255044010043	油缸Φ50xΦ40x995	Right lifting cylinder Φ50xΦ40x995	2	2.5T-2000
B	255044010044	油缸Φ50xΦ40x1245	Right lifting cylinder Φ50xΦ40x1245	2	2.5T-2500
B	255044010055	油缸Φ50xΦ40x1495	Right lifting cylinder Φ50xΦ40x1495	2	2.5T-3000
B	255044010045	油缸Φ50xΦ40x1645	Right lifting cylinder Φ50xΦ40x1645	2	2.5T-3300
B	255044010046	油缸Φ50xΦ40x1745	Right lifting cylinder Φ50xΦ40x1745	2	2.0T-3500

256898501040 起升油缸（标准门架）/LIFTING PIPE（stand mast）

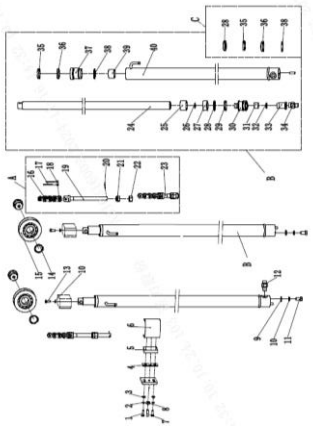

序号/NO	编码/SN	名称	Name	数量/QTY	备注/Remark
B	255044010047	油缸Φ50xΦ40x1845	Right lifting cylinder Φ50xΦ40x1845	2	2.5T-3600
B	255044010048	油缸Φ50xΦ40x1995	Right lifting cylinder Φ50xΦ40x1995	2	2.5T-3700
B	255044010049	油缸Φ50xΦ40x2120	Right lifting cylinder Φ50xΦ40x2120	2	2.5T-4000
B	255044010050	油缸Φ50xΦ40x2245	Right lifting cylinder Φ50xΦ40x2245	2	2.5T-4300
B	255044010051	油缸Φ50xΦ40x2495	Right lifting cylinder Φ50xΦ40x2495	2	2.5T-4500
B	255044010052	油缸Φ50xΦ40x2545	Right lifting cylinder Φ50xΦ40x2545	2	2.5T-5000
B	255044010053	油缸Φ50xΦ40x2745	Right lifting cylinder Φ50xΦ40x2745	2	2.5T-5500
B	255044010054	油缸Φ50xΦ40x2995	Right lifting cylinder Φ50xΦ40x2995	2	2.5T-6000
B	256044016001	油缸Φ56xΦ45x995	Right lifting cylinder Φ56xΦ45x995	2	3.0T-2000
B	256044016002	油缸Φ56xΦ45x1245	Right lifting cylinder Φ56xΦ45x1245	2	3.0T-2500
B	256044016003	油缸Φ56xΦ45x1495	Right lifting cylinder Φ56xΦ45x1495	2	3.0T-3000
B	256044016004	油缸Φ56xΦ45x1645	Right lifting cylinder Φ56xΦ45x1645	2	3.0T-3300
B	256044016005	油缸Φ56xΦ45x1745	Right lifting cylinder Φ56xΦ45x1745	2	3.0T-3500
B	256044016006	油缸Φ56xΦ45x1845	Right lifting cylinder Φ56xΦ45x1845	2	3.0T-3600
B	256044016007	油缸Φ56xΦ45x1995	Right lifting cylinder Φ56xΦ45x1995	2	3.0T-3700
B	256044016008	油缸Φ56xΦ45x2120	Right lifting cylinder Φ56xΦ45x2120	2	3.0T-4000
B	256044016009	油缸Φ56xΦ45x2245	Right lifting cylinder Φ56xΦ45x2245	2	3.0T-4300
B	256044016010	油缸Φ56xΦ45x2495	Right lifting cylinder Φ56xΦ45x2495	2	3.0T-4500
B	256044016011	油缸Φ56xΦ45x2545	Right lifting cylinder Φ56xΦ45x2545	2	3.0T-5000
B	256044016012	油缸Φ56xΦ45x2745	Right lifting cylinder Φ56xΦ45x2745	2	3.0T-5500
B	256044016013	油缸Φ56xΦ45x2995	Right lifting cylinder Φ56xΦ45x2995	2	3.0T-6000
B	257644016001	油缸Φ60xΦ50x995	Right lifting cylinder Φ60xΦ50x1245	2	3.5-3.8T-2000
B	257644016002	油缸Φ60xΦ50x1245	Right lifting cylinder Φ60xΦ50x1245	2	3.5-3.8T-2500
B	257644016003	油缸Φ60xΦ50x1495	Right lifting cylinder Φ60xΦ50x1495	2	3.5-3.8T-3000
B	257644016004	油缸Φ60xΦ50x1645	Right lifting cylinder Φ60xΦ50x1645	2	3.5-3.8T-3300
B	257644016005	油缸Φ60xΦ50x1745	Right lifting cylinder Φ60xΦ50x1745	2	3.5-3.8T-3500
B	257644016006	油缸Φ60xΦ50x1845	Right lifting cylinder Φ60xΦ50x1845	2	3.5-3.8T-3600
B	257644016007	油缸Φ60xΦ50x1995	Right lifting cylinder Φ60xΦ50x1995	2	3.5-3.8T-3700
B	257644016008	油缸Φ60xΦ50x2120	Right lifting cylinder Φ60xΦ50x2120	2	3.5-3.8T-4000
B	257644016009	油缸Φ60xΦ50x2245	Right lifting cylinder Φ60xΦ50x2245	2	3.5-3.8T-4300
B	257644016010	油缸Φ60xΦ50x2495	Right lifting cylinder Φ60xΦ50x2495	2	3.5-3.8T-4500

256898501040 起升油缸（标准门架）/LIFTING PIPE（stand mast）

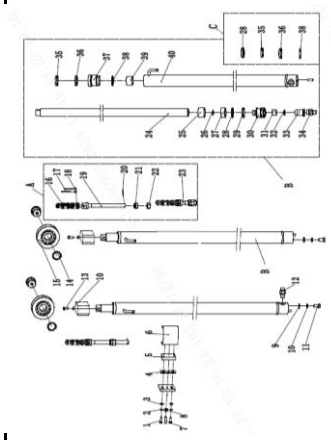

序号/NO	编码/SN	名称	Name	数量/QTY	备注/Remark
B	257644016011	油缸Φ60xΦ50x2545	Right lifting cylinder Φ60xΦ50x2545	2	3.5-3.8T-5000
B	257644016012	油缸Φ60xΦ50x2745	Right lifting cylinder Φ60xΦ50x2745	2	3.5-3.8T-5500
B	257644016013	油缸Φ60xΦ50x2995	Right lifting cylinder Φ60xΦ50x2995	2	3.5-3.8T-6000
C	255098510001	密封件修理包(标准门架起升缸)-2.5t	Seal repair kit (standard gantry lift cylinder)	1	2.5T
C	256098510001	密封件修理包(标准门架起升缸)-3.0t	Seal repair kit (standard gantry lift cylinder)	1	3.0T
C	257698510001	密封件修理包(标准门架起升缸)-3.8t	Seal repair kit (standard gantry lift cylinder)	1	3.8T
1	910100300023	螺栓GB5783-M8x25-8.8	BoltGB5783-M8x25-8.8	4	
2	910400500006	弹簧垫圈GB93-8	Spring WasherGB93-8	4	
3	910400100006	平垫圈GB97.1-8-200HV	Flat WasherGB97.1-8-200HV	4	
4	255044520099	垫片	shim	2	
5	255044520100	支撑块	Support block	2	
6	255044520098	弯板	Bending board	2	
7	910300100041	螺栓GB5783-M10x50-8.8	Bolt GB5783-M10x50-8.8	2	
8	910300100007	螺母GB6170-M10-10	Nut GB6170-M10-10	2	
9	910400100008	平垫圈GB97.1-12-200HV	Washer GB97.1-12-200HV	2	
10	910400500008	弹簧垫圈GB93-12	Washer GB93-12	4	
11	910100400009	螺栓GB5786-M12x1.25x25-8.8	Bolt GB5786-M12x1.25x25-8.8	2	
12	253644020101	防爆阀-2T-24°	Explosion proof valve -2T-24 °	1	2.5T
12	257644520003	防爆阀-3T-24°	Explosion proof valve -3T-24 °	1	3.0-3.8T
13	910100400029	螺栓GB5786-M16x1.5x40-8.8	Bolt GB5786-M16x1.5x40-8.8	2	
14	910401300020	轴用弹性挡圈GB894.1-40	Circlip GB894.1-40	2	2.5-3.0T
14	910401300022	轴用弹性挡圈GB894.1-45	Circlip GB894.1-40	2	3.5-3.8T
15	940200500003	链轮轴承780708K1-Φ72xΦ30x21	Chain wheel bearing 780708K-Φ72xΦ30x21	2	2.5-3.0T
15	940200500015	链轮轴承780708K3-Φ95xΦ40x27	Chain wheel bearing 780708K3-Φ95xΦ40x27	2	3.5-3.8T
16	910900400014	板式链GB6074-LH1623	LH1623 chain	1	2.5-3.0T
16	910900400015	板式链GB6074-LH1634	LH1634 chain	1	3.5-3.8T
17	910600600022	开口销GB91-2.5x40	Cotter Pin GB91-2.5x40	2	2.5-3.0T
17	910600600023	开口销GB91-3x40	Cotter Pin GB91-3x40	2	3.5-3.8T
18	255044020146	销轴Φ9.5x25	Pin axis Φ 9.5x25	2	2.5-3.0T
18	256544020706	销轴Φ9.5x38	Pin axis Φ 9.5x38	2	3.5-3.8T
19	255044020157	链条螺栓M18x1.5x217	Chain bolt M18x1.5x217	2	2.5-3.0T

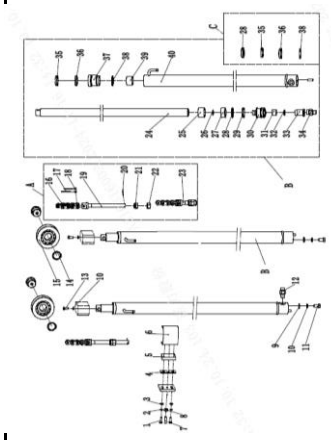

256898501040 起升油缸（标准门架）/LIFTING PIPE（stand mast）					
序号/NO	编码/SN	名称	Name	数量/QTY	备注/Remark
19	256544020707	链条螺栓M22x1.5x242.3	Chain bolts M22x1.5x214	2	3.5-3.8T
20	910600600030	开口销GB91-3.2x30	Split pin 3.2x30	2	2.5-3.0T
20	910600600023	开口销GB91-3x40	Split pin 3.2x40	2	3.5-3.8T
21	255044020158	球面螺母M18x1.5	Nut M18x1.5	2	2.5-3.0T
21	910300200007-D02	螺母GB6171-M22x1.5-10(黑)	Nut M22x1.5-10	2	3.5-3.8T
22	910300200012-D02	螺母GB6171-M18x1.5-10(黑)	Nut M18x1.5	2	2.5-3.0T
22	910300200007-D02	螺母GB6171-M22x1.5-10(黑)	Nut M22x1.5-10	2	3.5-3.8T
23	275344520007	链条螺栓M18x1.5x102	Chain bolt M18x1.5x102	2	2.5-3.0T
23	256544020705	链条螺栓M22x1.5x112.3	Chain boltM22x1.5x112.3	2	3.5-3.8T
24	▲	活塞杆	Piston rod	1	Not available separately
25	▲	调整套35.5x44xL1	Adjusting bushing 35.5x44xL1	1	Not available separately
26	▲	钢丝挡圈	Circlip	1	Not available separately
27	▲	支承环41x45x8	41 x45x8 bearing ring	1	Not available separately
28	▲	孔用密封圈	Seal ring 45x35x6	1	Not available separately
29	▲	挡片35x45x3	35 x45x3 block slice	1	Not available separately
30	▲	活塞	Piston	1	Not available separately
31	▲	铜套	Copper bushing	1	Not available separately
32	▲	钢丝挡圈	Circlip	1	Not available separately
33	▲	缓冲环	Buffer ring	1	Not available separately
34	▲	防爆阀	Anti-explosion valve	1	Not available separately
35	▲	防尘圈DH35X43X6.5	Dust ring	1	Not available separately
36	▲	轴用密封圈35X45X6	Seal ring	1	Not available separately
37	▲	导向套	Guide bushing	1	Not available separately
38	▲	O型密封圈	O seal ring	1	Not available separately
39	▲	钢背轴承3530	Bearing 3530	1	Not available separately
40	▲	缸体	Cylinder	1	Not available separately

256898501041门架起升管路（标准门架）/SINGLE ADDITIONAL TUBE(stand mast)

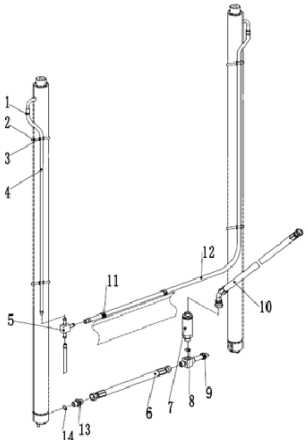

序号/NO	编码/SN	名称	Name	数量/QTY	备注/Remark
1	255044020043	卡箍	Hoop	1	
2	921600400001	扎带4x250	Strip 4x250	1	
3	255044020042	压板	Press plate	1	
4	900200301004	回油管1L=550	Oil return hose1L=550	1	H=2000-（2.5-3.0t）
	900200301004	回油管1L=800	Oil return hose1L=800	1	H=2500-（2.5-3.0t）
	900200301004	回油管1L=1050	Oil return hose1L=1050	1	H=3000-（2.5-3.0t）
	900200301004	回油管1L=1200	Oil return hose1L=1200	1	H=3300-（2.5-3.0t）
	900200301004	回油管1L=1300	Oil return hose1L=1300	1	H=3500-（2.5-3.0t）
	900200301004	回油管1L=1350	Oil return hose1L=1350	1	H=3600-（2.5-3.0t）
	900200301004	回油管1L=1400	Oil return hose1L=1400	1	H=3700-（2.5-3.0t）
	900200301004	回油管1L=1600	Oil return hose1L=1600	1	H=4000-（2.5-3.0t）
	900200301004	回油管1L=1750	Oil return hose1L=1750	1	H=4300-（2.5-3.0t）
	900200301004	回油管1L=1850	Oil return hose1L=1850	1	H=4500-（2.5-3.0t）
	900200301004	回油管1L=2100	Oil return hose1L=2100	1	H=5000-（2.5-3.0t）
	900200301004	回油管1L=2400	Oil return hose1L=2400	1	H=5500-（2.5-3.0t）
	900200301004	回油管1L=2650	Oil return hose1L=2650	1	H=6000-（2.5-3.0t）
4	900200301004	回油管1L=660	Oil return hose1L=660	1	H=2000-（3.5-3.8t）
	900200301004	回油管1L=910	Oil return hose1L=910	1	H=2500-（3.5-3.8t）
	900200301004	回油管1L=1160	Oil return hose1L=1160	1	H=3000-（3.5-3.8t）
	900200301004	回油管1L=1310	Oil return hose1L=1310	1	H=3300-（3.5-3.8t）
	900200301004	回油管1L=1410	Oil return hose1L=1410	1	H=3500-（3.5-3.8t）
	900200301004	回油管1L=1460	Oil return hose1L=1460	1	H=3600-（3.5-3.8t）
	900200301004	回油管1L=1510	Oil return hose1L=1510	1	H=3700-（3.5-3.8t）
	900200301004	回油管1L=1710	Oil return hose1L=1710	1	H=4000-（3.5-3.8t）
	900200301004	回油管1L=1860	Oil return hose1L=1860	1	H=4300-（3.5-3.8t）
	900200301004	回油管1L=1960	Oil return hose1L=1960	1	H=4500-（3.5-3.8t）
	900200301004	回油管1L=2210	Oil return hose1L=2210	1	H=5000-（3.5-3.8t）
	900200301004	回油管1L=2510	Oil return hose1L=2510	1	H=5500-（3.5-3.8t）
	900200301004	回油管1L=2760	Oil return hose1L=2760	1	H=6000-（3.5-3.8t）
5	255044020118	接头(三通)	Joint	1	
6	257544029601	液压管总成(直)15-L390-2SC-24°	Hydraulic hose assembly 15-L390-2SC-24°	1	

256898501041门架起升管路（标准门架）/SINGLE ADDITIONAL TUBE(stand mast)

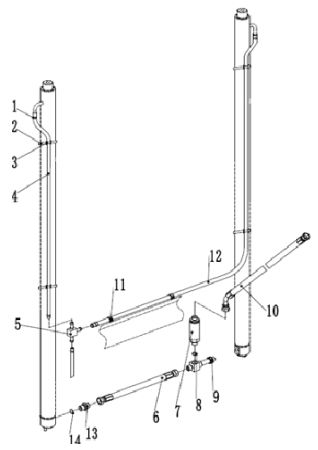

序号/NO	编码/SN	名称	Name	数量/QTY	备注/Remark
7	950700300007	限速阀XSF-F16L-48	Speed limit valve XSF-F16L-48	1	2.5t
7	950700300010	限速阀XSF-F16L-60	Speed limit valve XSF-F16L-60	1	3.0t
7	257644529005	限速阀XSF-F16L-70-24°	Speed limit valve XSF-F16L-70	1	3.5-3.8t
8	910800100040	O形圈-外24x2.4	Oring 24x2.4	1	
9	255044010040	接头(三通)	Joint	1	
10	252144029001	液压管总成(135°)15-L850-2SC-60°	Hydraulic hose assembly(135°)15-L850-2SC-60	1	
11	921600400003	扎带(带扣)P-N156-00646	Strip P-N156-00646	2	
12	900200301004	回油管2L=1350	Oil return hose2L=1350	1	H=2000-（2.5-3.0t）
12	900200301004	回油管2L=1600	Oil return hose2L=1600	1	H=2500-（2.5-3.0t）
12	900200301004	回油管2L=1850	Oil return hose2L=1850	1	H=3000-（2.5-3.0t）
12	900200301004	回油管2L=2000	Oil return hose2L=2000	1	H=3300-（2.5-3.0t）
12	900200301004	回油管2L=2100	Oil return hose2L=2100	1	H=3500-（2.5-3.0t）
12	900200301004	回油管2L=2150	Oil return hose2L=2150	1	H=3600-（2.5-3.0t）
12	900200301004	回油管2L=2200	Oil return hose2L=2200	1	H=3700-（2.5-3.0t）
12	900200301004	回油管2L=2400	Oil return hose2L=2400	1	H=4000-（2.5-3.0t）
12	900200301004	回油管2L=2550	Oil return hose2L=2550	1	H=4300-（2.5-3.0t）
12	900200301004	回油管2L=2650	Oil return hose2L=2650	1	H=4500-（2.5-3.0t）
12	900200301004	回油管2L=2900	Oil return hose2L=2900	1	H=5000-（2.5-3.0t）
12	900200301004	回油管2L=3200	Oil return hose2L=3200	1	H=5500-（2.5-3.0t）
12	900200301004	回油管2L=3450	Oil return hose2L=3450	1	H=6000-（2.5-3.0t）
12	900200301004	回油管2L=1460	Oil return hose2L=1460	1	H=2000-（3.5-3.8t）
12	900200301004	回油管2L=1710	Oil return hose2L=1710	1	H=2500-（3.5-3.8t）
12	900200301004	回油管2L=1960	Oil return hose2L=1960	1	H=3000-（3.5-3.8t）
12	900200301004	回油管2L=2110	Oil return hose2L=2110	1	H=3300-（3.5-3.8t）
12	900200301004	回油管2L=2210	Oil return hose2L=2210	1	H=3500-（3.5-3.8t）
12	900200301004	回油管2L=2260	Oil return hose2L=2260	1	H=3600-（3.5-3.8t）
12	900200301004	回油管2L=2310	Oil return hose2L=2310	1	H=3700-（3.5-3.8t）
12	900200301004	回油管2L=2510	Oil return hose2L=2510	1	H=4000-（3.5-3.8t）
12	900200301004	回油管2L=2660	Oil return hose2L=2660	1	H=4300-（3.5-3.8t）
12	900200301004	回油管2L=2760	Oil return hose2L=2760	1	H=4500-（3.5-3.8t）
12	900200301004	回油管2L=3010	Oil return hose2L=3010	1	H=5000-（3.5-3.8t）

256898501041门架起升管路（标准门架）/SINGLE ADDITIONAL TUBE(stand mast)

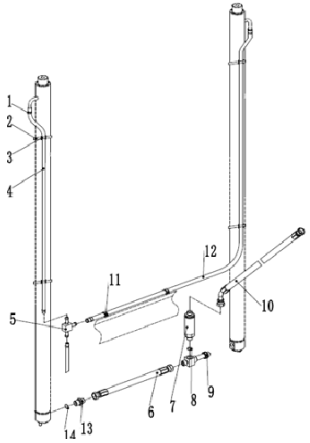

序号/NO	编码/SN	名称	Name	数量/QTY	备注/Remark
12	900200301004	回油管2L=3310	Oil return hose2L=3310	1	H=5500-（3.5-3.8t）
12	900200301004	回油管2L=3560	Oil return hose2L=3560	1	H=6000-（3.5-3.8t）
13	253644020101	防爆阀-2T-24°	Explosion proof valve -2T-24 °	1	2.5t
13	257644520003	防爆阀-3T-24°	Explosion proof valve -3T-24 °	3	3.0-3.8t
14	910800100003	O形圈-内17x2.65	Oring 17x2.65	3	

256898501042 单附加管路(标准门架)SINGLE ADDITIONAL TUBE(stand mast)

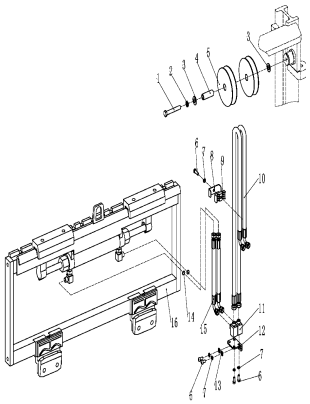

序号/NO	编码/SN	名称	Name	数量/QTY	备注/Remark
1	910100100056	螺栓GB5782-M12x90-8.8	Bolt GB5782-M12x90-8.8	1	
2	910400500008	弹簧垫圈GB93-12	WasherGB93-12	1	
3	910400100008	平垫圈GB97.1-12-200HV	Washer GB97.1-12-200HV	1	
4	255030520022	衬套Φ22xΦ13x56	Bush Φ22xΦ13x56	1	
5	255030520021	滑轮Φ110x27(单槽)	Pulley Φ110x27	2	
6	910200200059	螺钉GB70.1-M8x30-8.8	ScrewGB70.1-M8x30-8.8	2	
7	910400500006	弹簧垫圈GB93-8	Washer GB93-8	6	
8	255028520034	胶管固定块	Rubber pipe lump	2	
9	255028520035	管夹安装板	Pipe press fixedly piank	2	
10	256629021001	液压管总成(直)10-L2700-1SC-60°	Hydraulic hose assembly 10-L2700-1SC-60°	2	2.5-3.0t-H=2000
10	256530520702	液压管总成(直)10-L3220-1SC-60°	Hydraulic hose assembly 10-L3220-1SC-60°	2	2.5-3.0t-H=2500
10	281228011001	液压管总成(直)10-L3700-1SC-60°	Hydraulic hose assembly 10-L3700-1SC-60°	2	2.5-3.0t-H=3000
10	256827521001	液压管总成(直)10-L3950-1SC-60°	Hydraulic hose assembly 10-L3950-1SC-60°	2	2.5-3.0t-H=3300
10	281227511002	液压管总成(直)10-L4200-1SC-60°	Hydraulic hose assembly 10-L4200-1SC-60°	2	2.5-3.0t-H=3500
10	281227511003	液压管总成(直)10-L4300-1SC-60°	Hydraulic hose assembly 10-L4300-1SC-60°	2	2.5-3.0t-H=3600
10	255028520062	液压管总成(直)10-L4400-1SC-60°	Hydraulic hose assembly 10-L4400-1SC-60°	2	2.5-3.0t-H=3700
10	255028520063	液压管总成(直)10-L4820-1SC-60°	Hydraulic hose assembly 10-4820-1SC-60°	2	2.5-3.0t-H=4000
10	256631020701	液压管总成(直)10-L5100-1SC-60°	Hydraulic hose assembly 10-L5100-1SC-60°	2	2.5-3.0t-H=4300
10	275228011002	液压管总成(直)10-L5300-1SC-60°	Hydraulic hose assembly 10-L5300-1SC-60°	2	2.5-3.0t-H=4500
10	252127521004	液压管总成(直)10-L5800-1SC-60°	Hydraulic hose assembly 10-L5800-1SC-60°	2	2.5-3.0t-H=5000
10	256627521005	液压管总成(直)10-L6400-1SC-60°	Hydraulic hose assembly 10-L6400-1SC-60°	2	2.5-3.0t-H=5500
10	256528020701	液压管总成(直)10-L6900-1SC-60°	Hydraulic hose assembly 10-L6900-1SC-60°	2	2.5-3.0t-H=6000
10	255030520005	液压管总成(直)10-L2900-1SC-60°	Hydraulic hose assembly 10-L2900-1SC-60°	2	3.5-3.8t-H=2000
10	256028020001	液压管总成(直)10-L3400-1SC-60°	Hydraulic hose assembly 10-L3400-1SC-60°	2	3.5-3.8t-H=2500
10	263030520006	液压管总成(直)10-L3900-1SC-60°	Hydraulic hose assembly 10-L3900-1SC-60°	2	3.5-3.8t-H=3000
10	281227511002	液压管总成(直)10-L4200-1SC-60°	Hydraulic hose assembly 10-L4200-1SC-60°	2	3.5-3.8t-H=3300
10	255028520062	液压管总成(直)10-L4400-1SC-60°	Hydraulic hose assembly 10-L4400-1SC-60°	2	3.5-3.8t-H=3500
10	281227511004	液压管总成(直)10-L4500-1SC-60°	Hydraulic hose assembly 10-L4500-1SC-60°	2	3.5-3.8t-H=3600
10	256628021001	液压管总成(直)10-L4600-1SC-60°	Hydraulic hose assembly 10-L4600-1SC-60°	2	3.5-3.8t-H=3700
10	281227511005	液压管总成(直)10-L4900-1SC-60°	Hydraulic hose assembly 10-L4900-1SC-60°	2	3.5-3.8t-H=4000
10	275228011002	液压管总成(直)10-L5300-1SC-60°	Hydraulic hose assembly 10-L5300-1SC-60°	2	3.5-3.8t-H=4300

256898501042 单附加管路(标准门架)SINGLE ADDITIONAL TUBE(stand mast)

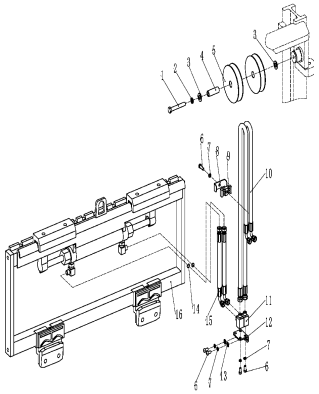

序号/NO	编码/SN	名称	Name	数量/QTY	备注/Remark
10	256527520704	液压管总成(直)10-L5450-1SC-60°	Hydraulic hose assembly 10-L5450-1SC-60°	2	3.5-3.8t-H=4500
10	275228011003	液压管总成(直)10-L6000-1SC-60°	Hydraulic hose assembly 10-L6000-1SC-60°	2	3.5-3.8t-H=5000
10	256028020009	液压管总成(直)10-L6600-1SC-60°	Hydraulic hose assembly 10-L6600-1SC-60°	2	3.5-3.8t-H=5500
10	256028020010	液压管总成(直)10-L7100-1SC-60°	Hydraulic hose assembly 10-L7100-1SC-60°	2	3.5-3.8t-H=6000
11	255029020024	接头(锁定弯)8-2xM16x1.5-60°	Joint 8-2XM16x1.5-60°	2	
12	254127520001	安装板	fixedly piank	1	
13	910400100006	平垫圈GB97.1-8-200HV	Washer GB97.1-8-200HV	2	
14	910800100042	O形圈-外13.6x2.4	Oring 13.6x2.4	4	
15	255042520101	液压管总成(90°)10-L500-1SC-60°-0°	Hydraulic hose assembly (90°)10-L500-1SC-60°	2	
16	256042510004	外置侧移器1100(LH)	Sideshifters(LH)	1	
16	253542510001	外置侧移器1100(LD)	Sideshifters(LD)	1	
16	256042510002	侧移器总成(卡斯卡特)	Sideshifters(CASCADE)	1	

256898501043 双附加管路(标准门架)DOUBLE ADDITIONAL TUBE(stand mast)

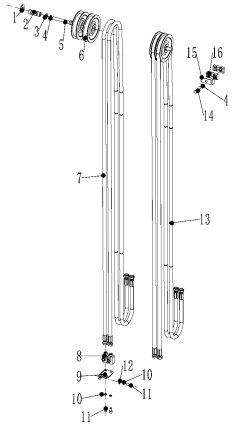

序号/NO	编码/SN	名称	Name	数量/QTY	备注/Remark
1	910400200005	大垫圈GB96.1-12-200HV	Big Washer GB96.1-12-200HV	4	
2	255030520022	衬套Φ22xΦ13x56	Bush Φ22xΦ13x56	2	
3	910400100008	平垫圈GB97.1-12-200HV	washer GB97.1-12-200HV	2	
4	910400500008	弹簧垫圈GB93-12	Spring washer GB93-12	12	
5	910100100056	螺栓GB5782-M12x90-8.8	Bolt GB5782-M12x90-8.8	2	
6	255030520021	滑轮Φ110x27(单槽	Pulley Φ110x27	4	
7	256629021001	液压管总成(直)10-L2700-1SC-60°	Hydraulic hose assembly 10-L2700-1SC-60°	2	2.5-3.0t-H=2000
	256530520702	液压管总成(直)10-L3220-1SC-60°	Hydraulic hose assembly 10-L3220-1SC-60°	2	2.5-3.0t-H=2500
	281228011001	液压管总成(直)10-L3700-1SC-60°	Hydraulic hose assembly 10-L3700-1SC-60°	2	2.5-3.0t-H=3000
	256827521001	液压管总成(直)10-L3950-1SC-60°	Hydraulic hose assembly 10-L3950-1SC-60°	2	2.5-3.0t-H=3300
	281227511002	液压管总成(直)10-L4200-1SC-60°	Hydraulic hose assembly 10-L4200-1SC-60°	2	2.5-3.0t-H=3500
	281227511003	液压管总成(直)10-L4300-1SC-60°	Hydraulic hose assembly 10-L4300-1SC-60°	2	2.5-3.0t-H=3600
	255028520062	液压管总成(直)10-L4400-1SC-60°	Hydraulic hose assembly 10-L4400-1SC-60°	2	2.5-3.0t-H=3700
	255028520063	液压管总成(直)10-L4820-1SC-60°	Hydraulic hose assembly 10-4820-1SC-60°	2	2.5-3.0t-H=4000
	256631020701	液压管总成(直)10-L5100-1SC-60°	Hydraulic hose assembly 10-L5100-1SC-60°	2	2.5-3.0t-H=4300
	275228011002	液压管总成(直)10-L5300-1SC-60°	Hydraulic hose assembly 10-L5300-1SC-60°	2	2.5-3.0t-H=4500
	252127521004	液压管总成(直)10-L5800-1SC-60°	Hydraulic hose assembly 10-L5800-1SC-60°	2	2.5-3.0t-H=5000
	256627521005	液压管总成(直)10-L6400-1SC-60°	Hydraulic hose assembly 10-L6400-1SC-60°	2	2.5-3.0t-H=5500
	256528020701	液压管总成(直)10-L6900-1SC-60°	Hydraulic hose assembly 10-L6900-1SC-60°	2	2.5-3.0t-H=6000
	255030520005	液压管总成(直)10-L2900-1SC-60°	Hydraulic hose assembly 10-L2900-1SC-60°	2	3.5-3.8t-H=2000
	256028020001	液压管总成(直)10-L3400-1SC-60°	Hydraulic hose assembly 10-L3400-1SC-60°	2	3.5-3.8t-H=2500
	263030520006	液压管总成(直)10-L3900-1SC-60°	Hydraulic hose assembly 10-L3900-1SC-60°	2	3.5-3.8t-H=3000
	281227511002	液压管总成(直)10-L4200-1SC-60°	Hydraulic hose assembly 10-L4200-1SC-60°	2	3.5-3.8t-H=3300
	255028520062	液压管总成(直)10-L4400-1SC-60°	Hydraulic hose assembly 10-L4400-1SC-60°	2	3.5-3.8t-H=3500
	281227511004	液压管总成(直)10-L4500-1SC-60°	Hydraulic hose assembly 10-L4500-1SC-60°	2	3.5-3.8t-H=3600
	256628021001	液压管总成(直)10-L4600-1SC-60°	Hydraulic hose assembly 10-L4600-1SC-60°	2	3.5-3.8t-H=3700
	281227511005	液压管总成(直)10-L4900-1SC-60°	Hydraulic hose assembly 10-L4900-1SC-60°	2	3.5-3.8t-H=4000
	275228011002	液压管总成(直)10-L5300-1SC-60°	Hydraulic hose assembly 10-L5300-1SC-60°	2	3.5-3.8t-H=4300
	256527520704	液压管总成(直)10-L5450-1SC-60°	Hydraulic hose assembly 10-L5450-1SC-60°	2	3.5-3.8t-H=4500
	275228011003	液压管总成(直)10-L6000-1SC-60°	Hydraulic hose assembly 10-L6000-1SC-60°	2	3.5-3.8t-H=5000
	256028020009	液压管总成(直)10-L6600-1SC-60°	Hydraulic hose assembly 10-L6600-1SC-60°	2	3.5-3.8t-H=5500

256898501043 双附加管路(标准门架)DOUBLE ADDITIONAL TUBE(stand mast)

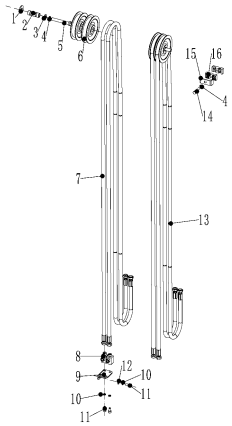

序号/NO	编码/SN	名称	Name	数量/QTY	备注/Remark
7	256028020010	液压管总成(直)10-L7100-1SC-60°	Hydraulic hose assembly 10-L7100-1SC-60°	2	3.5-3.8t-H=6000
8	255029020024	接头(锁定弯)8-2xM16x1.5-60°	Joint 8-2XM16x1.5-60°	4	
9	254127520001	安装板	Plate	2	
10	910400500006	弹簧垫圈GB93-8	Spring washer GB93-8	12	
11	910200200055	螺钉GB70.1-M8x16-8.8	Screw GB70.1-M8x16-8.8	8	
12	910400100006	平垫圈GB97.1-8-200HV	Washer GB97.1-8-200HV	4	
13	254128520037	液压管总成(直)10-L3150-1SC-60°	Hydraulic hose assembly 10-L3150-1SC-60°	2	2.5-3.0t-H=2000
13	263030520005	液压管总成(直)10-L3670-1SC-60°	Hydraulic hose assembly 10-L3670-1SC-60°	2	2.5-3.0t-H=2500
13	252127521001	液压管总成(直)10-L4150-1SC-60°	Hydraulic hose assembly 10-L4150-1SC-60°	2	2.5-3.0t-H=3000
13	255028520062	液压管总成(直)10-L4400-1SC-60°	Hydraulic hose assembly 10-L4400-1SC-60°	2	2.5-3.0t-H=3300
13	275228011001	液压管总成(直)10-L4650-1SC-60°	Hydraulic hose assembly 10-L4650-1SC-60°	2	2.5-3.0t-H=3500
13	275227511002	液压管总成(直)10-L4700-1SC-60°	Hydraulic hose assembly 10-L4700-1SC-60°	2	2.5-3.0t-H=3600
13	256028020004	液压管总成(直)10-L4850-1SC-60°	Hydraulic hose assembly 10-L4850-1SC-60°	2	2.5-3.0t-H=3700
13	256827521003	液压管总成(直)10-L5250-1SC-60°	Hydraulic hose assembly 10-L5250-1SC-60°	2	2.5-3.0t-H=4000
13	281227511007	液压管总成(直)10-L5500-1SC-60°	Hydraulic hose assembly 10-L5500-1SC-60°	2	2.5-3.0t-H=4300
13	281228011004	液压管总成(直)10-L5700-1SC-60°	Hydraulic hose assembly 10-L5700-1SC-60°	2	2.5-3.0t-H=4500
13	256528020706	液压管总成(直)10-L6250-1SC-60°	Hydraulic hose assembly 10-L6250-1SC-60°	2	2.5-3.0t-H=5000
13	256827521005	液压管总成(直)10-L6800-1SC-60°	Hydraulic hose assembly 10-L6800-1SC-60°	2	2.5-3.0t-H=5500
13	256827521006	液压管总成(直)10-L7450-1SC-60°	Hydraulic hose assembly 10-L7450-1SC-60°	2	2.5-3.0t-H=6000
13	254128520039	液压管总成(直)10-L3250-1SC-60°	Hydraulic hose assembly 10-L3250-1SC-60°	2	3.5-3.8t-H=2000
13	281228011001	液压管总成(直)10-L3700-1SC-60°	Hydraulic hose assembly 10-L3700-1SC-60°	2	3.5-3.8t-H=2500
13	252127521002	液压管总成(直)10-L4350-1SC-60°	Hydraulic hose assembly 10-L4350-1SC-60°	2	3.5-3.8t-H=3000
13	256628021001	液压管总成(直)10-L4600-1SC-60°	Hydraulic hose assembly 10-L4600-1SC-60°	2	3.5-3.8t-H=3300
13	275331020701	液压管总成(直)10-L4770-1SC-60°	Hydraulic hose assembly 10-L4770-1SC-60°	2	3.5-3.8t-H=3500
13	256827521002	液压管总成(直)10-L4950-1SC-60°	Hydraulic hose assembly 10-L4950-1SC-60°	2	3.5-3.8t-H=3600
13	256631020701	液压管总成(直)10-L5100-1SC-60°	Hydraulic hose assembly 10-L5100-1SC-60°	2	3.5-3.8t-H=3700
13	252127521003	液压管总成(直)10-L5360-1SC-60°	Hydraulic hose assembly 10-L5360-1SC-60°	2	3.5-3.8t-H=4000
13	281228011004	液压管总成(直)10-L5700-1SC-60°	Hydraulic hose assembly 10-L570-1SC-60°	2	3.5-3.8t-H=4300
13	256627521003	液压管总成(直)10-L5900-1SC-60°	Hydraulic hose assembly 10-L5900-1SC-60°	2	3.5-3.8t-H=4500
13	256527520701	液压管总成(直)10-L6450-1SC-60°	Hydraulic hose assembly 10-L6450-1SC-60°	2	3.5-3.8t-H=5000
13	256627521004	液压管总成(直)10-L7000-1SC-60°	Hydraulic hose assembly 10-L7000-1SC-60°	2	3.5-3.8t-H=5500

256898501043 双附加管路(标准门架)DOUBLE ADDITIONAL TUBE(stand mast)

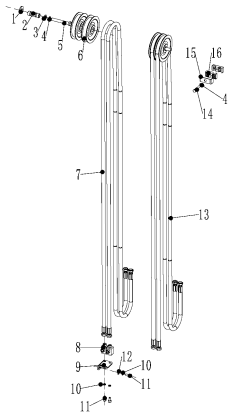

序号/NO	编码/SN	名称	Name	数量/QTY	备注/Remark
13	256827521006	液压管总成(直)10-L7450-1SC-60°	Hydraulic hose assembly 10-L7450-1SC-60°	2	3.5-3.8t-H=6000
14	910200200059	螺钉GB70.1-M8x30-8.8	Bolt GB70.1-M8x30-8.8	2	H=4300
15	255028520035	安装板(管夹)	Pipe clamp munting plate	4	H=4500
16	255028520034	胶管固定块	hose immobilization lump	4	H=5000

256898501044 门架(三级全自由门架)/MAST (three stage full free)

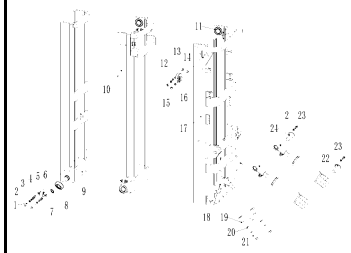

序号/NO	编码/SN	名称	Name	数量/QTY	备注/Remark
1	910100300039	螺栓GB5783-M10x40-8.8	Bolt GB5783-M10x40-8.8	4	
2	910400500007	弹簧垫圈GB93-10	Washer GB93-10	8	
3	910400100007	平垫圈GB97.1-10-200HV	Washer GB97.1-10-200HV	4	
4	255038020009	调整垫	Adjustable pad	8	
5	255038020008	调整套	Adjusting sleeve	4	
6	940200200005	侧滚轮Φ42-CD=68	Side rollerΦ42 - CD = 68	2	
7	910401300024	轴用弹性挡圈	Elastic retaining ring for shaft	4	
8	940200100020	主滚轮Φ119.2xΦ55x34	RollerΦ119.2xΦ55x34	4	选配
8	940200100021	主滚轮Φ119.6xΦ55x34	RollerΦ119.6xΦ55x34	4	选配
8	940200100022	主滚轮Φ120xΦ55x34	RollerΦ120xΦ55x34	4	选配
9	256844512001	内门架焊合 3600	Inner mast 3600	1	2.5-3.5t-H=3600
9	256844512002	内门架焊合 4000	Inner mast 4000	1	2.5-3.5t-H=4000
9	256844512003	内门架焊合 4350	Inner mast 4350	1	2.5-3.5t-H=4350
9	256844512004	内门架焊合 4500	Inner mast 4500	1	2.5-3.5t-H=4500
9	256844512005	内门架焊合 4700	Inner mast 4700	1	2.5-3.5t-H=4700
9	256844512006	内门架焊合 4800	Inner mast 4800	1	2.5-3.5t-H=4800
9	256844512007	内门架焊合 5000	Inner mast 5000	1	2.5-3.5t-H=5000
9	256844512008	内门架焊合 5400	Inner mast 5400	1	2.5-3.5t-H=5400
9	256844512009	内门架焊合 5500	Inner mast 5500	1	2.5-3.5t-H=5500
9	256844512010	内门架焊合 6000	Inner mast 6000	1	2.5-3.5t-H=6000
9	256844512011	内门架焊合 6500	Inner mast 6500	1	2.5-3.5t-H=6500
10	256844513001	中门架焊合 3600	Middle mast 3600	1	2.5-3.5t-H=3600
10	256844513002	中门架焊合 4000	Middle mast 4000	1	2.5-3.5t-H=4000
10	256844513003	中门架焊合 4350	Middle mast 4350	1	2.5-3.5t-H=4350
10	256844513004	中门架焊合 4500	Middle mast 4500	1	2.5-3.5t-H=4500
10	256844513005	中门架焊合 4700	Middle mast 4700	1	2.5-3.5t-H=4700
10	256844513006	中门架焊合 4800	Middle mast 4800	1	2.5-3.5t-H=4800
10	256844513007	中门架焊合 5000	Middle mast 5000	1	2.5-3.5t-H=5000
10	256844513008	中门架焊合 5400	Middle mast 5400	1	2.5-3.5t-H=5400
10	256844513009	中门架焊合 5500	Middle mast 5500	1	2.5-3.5t-H=5500
10	256844513010	中门架焊合 6000	Middle mast 6000	1	2.5-3.5t-H=6000

256898501044 门架(三级全自由门架)/MAST (three stage full free)

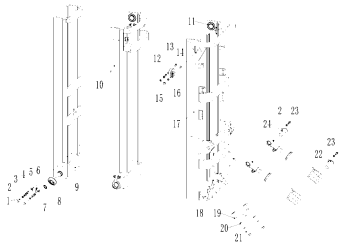

序号/NO	编码/SN	名称	Name	数量/QTY	备注/Remark
10	256844513011	中门架焊合 6500	Middle mast 6500	1	2.5-3.5t-H=6500
11	940200100024	主滚轮Φ111xΦ55x32	Roller Φ111xΦ55x32	4	
12	910100300050	螺栓GB5783-M12x30-8.8	Bolt GB5783-M12x30-8.8	8	
13	910400100008	平垫圈GB97.1-12-200HV	Washer GB97.1-12-200HV	8	
14	256544020701	垫圈Φ20xΦ13x0.5	Washer Φ20xΦ13x0.5	8	
14	256544020702	垫圈Φ20xΦ13x1	Washer Φ20xΦ13x1	8	
14	256544020703	垫圈Φ20xΦ13x0.2	Washer Φ20xΦ13x0.2	8	
15	910400500008	弹簧垫圈GB93-12	Washer GB93-12	8	
16	940200200002	侧滚轮Φ87-CD=55	Side roller Φ87-CD=55	4	
17	256844511001	外门架焊合 3600	Outer mast 3600	1	3.0-3.5t-H=3600
17	256844511002	外门架焊合 4000	Outer mast 4000	1	3.0-3.5t-H=4000
17	256844511003	外门架焊合 4350	Outer mast 4350	1	3.0-3.5t-H=4350
17	256844511004	外门架焊合 4500	Outer mast 4500	1	3.0-3.5t-H=4500
17	256844511005	外门架焊合 4700	Outer mast 4700	1	3.0-3.5t-H=4700
17	256844511006	外门架焊合 4800	Outer mast 4800	1	3.0-3.5t-H=4800
17	256844511007	外门架焊合 5000	Outer mast 5000	1	3.0-3.5t-H=5000
17	256844511008	外门架焊合 5400	Outer mast 5400	1	3.0-3.5t-H=5400
17	256844511009	外门架焊合 5500	Outer mast 5500	1	3.0-3.5t-H=5500
17	256844511010	外门架焊合 6000	Outer mast 6000	1	3.0-3.5t-H=6000
17	256844511011	外门架焊合 6500	Outer mast 6500	1	3.0-3.5t-H=6500
17	256744511001	外门架焊合 3600	Outer mast 3600	1	2.5-2.8t-H=3600
17	256744511002	外门架焊合 4000	Outer mast 4000	1	2.5-2.8t-H=4000
17	256744511003	外门架焊合 4350	Outer mast 4350	1	2.5-2.8t-H=4350
17	256744511004	外门架焊合 4500	Outer mast 4500	1	2.5-2.8t-H=4500
17	256744511005	外门架焊合 4700	Outer mast 4700	1	2.5-2.8t-H=4700
17	256744511006	外门架焊合 4800	Outer mast 4800	1	2.5-2.8t-H=4800
17	256744511007	外门架焊合 5000	Outer mast 5000	1	2.5-2.8t-H=5000
17	256744511008	外门架焊合 5400	Outer mast 5400	1	2.5-2.8t-H=5400
17	256744511009	外门架焊合 5500	Outer mast 5500	1	2.5-2.8t-H=5500
17	256744511010	外门架焊合 6000	Outer mast 6000	1	2.5-2.8t-H=6000
17	256744511011	外门架焊合 6500	Outer mast 6500	1	2.5-2.8t-H=6500

256898501044 门架(三级全自由门架)/MAST (three stage full free)

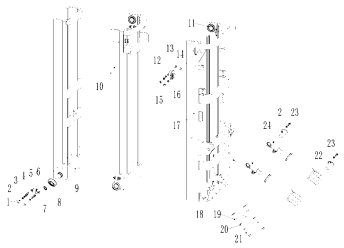

序号/NO	编码/SN	名称	Name	数量/QTY	备注/Remark
18	254144020063	轴瓦	Bearing bush	2	
19	256844021014	支座盖	Bearing cover	2	
20	910400500010	弹簧垫圈GB93-16	Washer GB93-16	7	
21	910100200016	螺栓GB5785-M16x1.5x70-8.8	Bolt GB5785-M16x1.5x70-8.8	4	
22	255044010057	带耳轴Φ30x82	Axle Φ30x82	4	
23	910100300035	螺栓GB5783-M10x20-8.8	Bolt GB5783-M10x20-8.8	4	
24	256844510001	带耳轴Φ30x94	Axle Φ30x94	2	

256898501045 货叉架(三级全自由门架)/FORK ARM CARRIER(three stage full free)

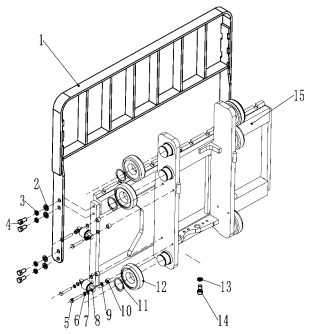

序号/NO	编码/SN	名称	Name	数量/QTY	备注/Remark
1	253540510001	挡货架焊合(1100x1080)	Fork carrier welding 1100x1080	1	2.8t-3.5t
1	255040510001	挡货架焊合(1040x986)	Fork carrier welding 1040X986	1	2.5t
2	910400100009	平垫圈GB97.1-14-200HV	Washer GB97.1-14-200HV	8	
3	910400500009	弹簧垫圈GB93-14	Washer GB93-14	8	
4	910100300062	螺栓GB5783-M14x30-8.8	Bolt GB5783-M14x30-8.8	8	
5	910100300043	螺栓GB5783-M10x60-8.8	Bolt GB5783-M10x60-8.8	8	
6	910400500007	弹簧垫圈GB93-10	Spring washer GB93-10	8	
7	910400100007	平垫圈GB97.1-10-200HV	washer GB97.1-10-200HV	8	
8	940200200005	侧滚轮Φ42-CD=68	Side rollerΦ42 - CD = 68	4	
9	255038020009	调整垫	Adjustable pad	8	
10	255038020008	调整套	Adjusting sleeve	8	
11	910401300026	轴用弹性挡圈GB894.1-55	Circlip GB894.1-55	6	
12	940200100020	主滚轮Φ119.2xΦ55x34	RollerΦ119.2xΦ55x34	6	选配
12	940200100021	主滚轮Φ119.6xΦ55x34	RollerΦ119.6xΦ55x34	6	选配
12	940200100022	主滚轮Φ120xΦ55x34	RollerΦ120xΦ55x34	6	选配
13	910400500008	弹簧垫圈GB93-12	WasherGB93-12	1	
14	910200200096	螺钉GB70.1-M12x20-8.8	Screw GB70.1-M12x20-8.8	1	
15	256838013001	货叉架焊合	Welding of fork racks	1	2.8-3.5t
15	256738013001	货叉架焊合	Welding of fork racks	1	2.5t

256898501046短起升油缸(三级全自由门架)/SHORT LIFTING CYLINDER (three stage full free)

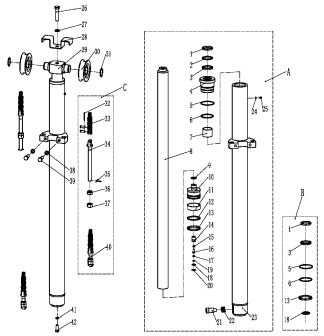

序号/NO	编码/SN	名称	Name	数量/QTY	备注/Remark
A	256144518001	油缸(M)Φ85xΦ60x622 (H=3600)	Short lifting cylinderΦ85xΦ60x622 (H=3600)	1	2.8-3.5t
A	256144518002	油缸(M)Φ85xΦ60x685 (H=4000)	Short lifting cylinderΦ85xΦ60x685 (H=4000)	1	
A	256144518003	油缸(M)Φ85xΦ60x748 (H=4300)	Short lifting cylinderΦ85xΦ60x748 (H=4300)	1	
A	256144518004	油缸(M)Φ85xΦ60x772 (H=4500)	Short lifting cylinderΦ85xΦ60x772 (H=4500)	1	
A	256144518005	油缸(M)Φ85xΦ60x805 (H=4700)	Short lifting cylinderΦ85xΦ60x805 (H=4700)	1	
A	256144518006	油缸(M)Φ85xΦ60x822 (H=4800)	Short lifting cylinderΦ85xΦ60x822 (H=4800)	1	
A	256144518007	油缸(M)Φ85xΦ60x879 (H=5000)	Short lifting cylinderΦ85xΦ60x879 (H=5000)	1	
A	256144518008	油缸(M)Φ85xΦ60x979 (H=5400)	Short lifting cylinderΦ85xΦ60x979 (H=5400)	1	
A	256144518009	油缸(M)Φ85xΦ60x995 (H=5500)	Short lifting cylinderΦ85xΦ60x995 (H=5500)	1	
A	256144518010	油缸(M)Φ85xΦ60x1112 (H=6000)	Short lifting cylinderΦ85xΦ60x1112 (H=6000)	1	
A	256144518011	油缸(M)Φ85xΦ60x1229 (H=6500)	Short lifting cylinderΦ85xΦ60x1229 (H=6500)	1	
A	255044510100	油缸(M)Φ75xΦ50x622 (H=3600)	Short lifting cylinder Φ75xΦ50x622 (H=3600)	1	2.5t
A	255044510050	油缸(M)Φ75xΦ50x685 (H=4000)	Short lifting cylinder Φ75xΦ50x685 (H=4000)	1	
A	255044510051	油缸(M)Φ75xΦ50x748 (H=4300)	Short lifting cylinder Φ75xΦ50x748 (H=4300)	1	
A	255044510052	油缸(M)Φ75xΦ50x772 (H=4500)	Short lifting cylinder Φ75xΦ50x772 (H=4500)	1	
A	255044510101	油缸(M)Φ75xΦ50x805 (H=4700)	Short lifting cylinder Φ75xΦ50x805 (H=4700)	1	
A	255044510053	油缸(M)Φ75xΦ50x822 (H=4800)	Short lifting cylinder Φ75xΦ50x822 (H=4800)	1	
A	255044510054	油缸(M)Φ75xΦ50x879 (H=5000)	Short lifting cylinder Φ75xΦ50x879 (H=5000)	1	
A	255044510102	油缸(M)Φ75xΦ50x979 (H=5400)	Short lifting cylinder Φ75xΦ50x979 (H=5400)	1	
A	255044510055	油缸(M)Φ75xΦ50x995 (H=5500)	Short lifting cylinder Φ75xΦ50x995 (H=5500)	1	
A	255044510056	油缸(M)Φ75xΦ50x1112 (H=6000)	Short lifting cylinder Φ75xΦ50x1112 (H=6000)	1	
A	255044510103	油缸(M)Φ75xΦ50x1229 (H=6500)	Short lifting cylinder Φ75xΦ50x1229 (H=6500)	1	
B	255098510005	密封件修理包(三级全自由中间缸)-2.5t	Seal kits (three stage full free lifting cylinder)	1	包含Inc.1.3.5.6.13.18
B	256198510005	密封件修理包(三级全自由中间缸)-2.8-3.5t	Seal kits (three stage full free lifting cylinder)	1	包含Inc.1.3.5.6.13.18
C	255044510124	起升链条LH1623-45	Lifting chain LH1623-45	2	H=3600
C	255044510044	起升链条LH1623-47	Lifting chain LH1623-47	2	H=4000
C	255044510045	起升链条LH1623-53	Lifting chain LH1623-53	2	H=4300
C	255044010060	起升链条LH1623-55	Lifting chain LH1623-55	2	H=4500
C	255044510133	起升链条LH1623-59	Lifting chain LH1623-59	2	H=4700/4800
C	255044510134	起升链条LH1623-63	Lifting chain LH1623-63	2	H=5000
C	255044510135	起升链条LH1623-61	Lifting chain LH1623-61	2	H=5400/5500

256898501046 短起升油缸(三级全自由门架)/SHORT LIFTING CYLINDER (three stage full free)

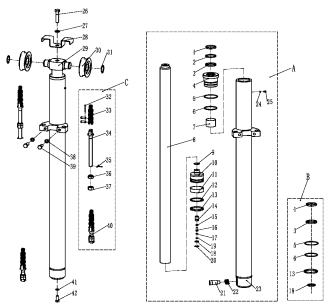

序号/NO	编码/SN	名称	Name	数量/QTY	备注/Remark
C	255044510136	起升链条LH1623-71	Lifting chain LH1623-71	2	H=6000
C	255044510137	起升链条LH1623-81	Lifting chain LH1623-81	2	H=6500
1	▲	防尘圈	Dust ring 50x58x6.5	1	不单独提供
2	▲	挡片50×60×3	Catch 50×60×3	1	不单独提供
3	▲	轴用密封圈	Seal ring 50×60×6	1	不单独提供
4	▲	导向套	Glide sleeve	1	不单独提供
5	▲	O型密封圈	O ring 74.4x3.1	1	不单独提供
6	▲	O型密封圈	O ring 69×3.55	1	不单独提供
7	▲	钢背轴承5040	Bearing5040	1	不单独提供
8	▲	活塞杆	Piston rod	1	不单独提供
9	▲	钢丝挡圈	Circlip	1	不单独提供
10	▲	活塞总成	Piston assembly	1	不单独提供
11	▲	支承环75x20x2.5	Support ring 75x20x2.5	1	不单独提供
12	▲	支承环75x65x3	Support ring 75x65x3	1	不单独提供
13	▲	孔用密封圈	Seal ring 75x65x6	1	不单独提供
14	▲	阀套	Valve cover	1	不单独提供
15	▲	弹簧	Spring	1	不单独提供
16	▲	阀芯	Valve plug	1	不单独提供
17	▲	挡片	Catch	1	不单独提供
18	▲	O型密封圈	O ring D20x2.4	1	不单独提供
19	▲	孔用弹性挡圈12	Circlip 12	1	不单独提供
20	▲	孔用弹性挡圈22	Circlip 22	1	不单独提供
21	▲	滑阀	Slide valve	1	不单独提供
22	▲	弹簧2.3x15x48.5	Spring2.3x15x48.5	1	不单独提供
23	▲	缸体	Cylinder	1	不单独提供
24	▲	垫片	Spacer	1	不单独提供
25	▲	内六角圆柱头螺钉M5x5	Screw M5x5	1	不单独提供
26	910100100071	螺栓GB5782-M16x50-8.8	Bolt GB5782-M16x50-8.8	1	
27	910400500010	弹簧垫圈GB93-16	Washer GB93-16	1	
28	255043520020	挡链板	Block chain plate	1	
29	255043520006	缸头	Cylinder head	1	

256898501046短起升油缸(三级全自由门架)/SHORT LIFTING CYLINDER (three stage full free)

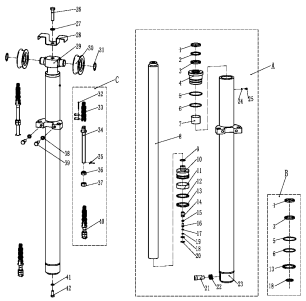

序号/NO	编码/SN	名称	Name	数量/QTY	备注/Remark
30	940200500001	链轮轴承780708K-Φ100XΦ40X27	Chain wheel bearing780708K-Φ100XΦ40X27	2	
31	910401300020	轴用弹性挡圈GB894.1-40	Circlip GB894.1-40	2	
32	910600600022	开口销GB91-2.5x40	split pin2.5x40	2	
33	910900400014	板式链GB6074-LH1623	LH1623 chain	2	不单独提供
34	255044020157	链条螺栓M18x1.5x217	Joint	2	
35	910600600030	开口销GB91-3.2x30	Split pin 3.2x30	2	
36	255044020158	球面螺母M18x1.5	Nut M18x1.5	2	
37	910300400007	螺母M18x1.5	Nut M18x1.5	2	
38	910400500009	弹簧垫圈GB93-14	Washer GB93-14	2	
39	910100400022	螺栓GB5786-M14x1.5x40-8.8	Bolt GB5786-M14x1.5x40-8.8	2	
41	255044020156	链条螺栓M18x1.5x102	Joint	2	
42	910400500008	弹簧垫圈GB93-12	SpringWasherGB93-12	1	
43	910100400009	螺栓GB5786-M12x1.25x25-8.8	BoltGB5786-M12x1.25x25-8.8	1	

256898501047 起升油缸(三级全自由门架)/LIFTING CYLINDER (three stage full free)

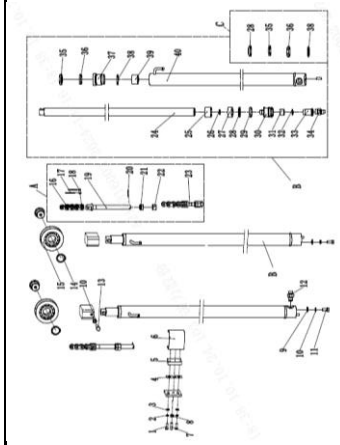

序号/NO	编码/SN	名称	Name	数量/QTY	备注/Remark
A	256844014002	起升链条LH1623-65	Lifting chainLH1623-65	2	H=3600
A	255044510046	起升链条LH1623-69	Lifting chainLH1623-69	2	H=4000
A	255044510138	起升链条LH1623-73	Lifting chainLH1623-73	2	H=4350
A	255044510047	起升链条LH1623-75	Lifting chainLH1623-75	2	H=4500
A	255043510139	起升链条LH1623-79	Lifting chainLH1623-79	2	H=4700/4800
A	255044510140	起升链条LH1623-85	Lifting chainLH1623-85	2	H=5000
A	255044510048	起升链条LH1623-95	Lifting chainLH1623-95	2	H=5400/5500
A	255044510049	起升链条LH1623-103	Lifting chainLH1623-103	2	H=6000
A	255044510125	起升链条LH1623-113	Lifting chainLH1623-113	2	H=6500
A	255044010100	起升链条LH1623-119	Lifting chainLH1623-119	2	H=7000
B	255044510104	油缸(L)Φ50xΦ40x1174	Cylinder (L)Φ50xΦ40x1174(H=3600)	1	2.5T
B	255044510004	油缸(L)Φ50xΦ40x1312	Cylinder (L)Φ50xΦ40x1312(H=4000)	1	2.5T
B	255044510005	油缸(L)Φ50xΦ40x1424	Cylinder (L)Φ50xΦ40x1424(H=4300)	1	2.5T
B	255044510006	油缸(L)Φ50xΦ40x1474	Cylinder (L)Φ50xΦ40x1474(H=4500)	1	2.5T
B	255044510105	油缸(L)Φ50xΦ40x1539	Cylinder (L)Φ50xΦ40x1539(H=4700)	1	2.5T
B	255044510007	油缸(L)Φ50xΦ40x1574	Cylinder (L)Φ50xΦ40x1574H=4800)	1	2.5T
B	255044510008	油缸(L)Φ50xΦ40x1617	Cylinder (L)Φ50xΦ40x1617(H=5000)	1	2.5T
B	255044510106	油缸(L)Φ50xΦ40x1717	Cylinder (L)Φ50xΦ40x1717(H=5400)	1	2.5T
B	255044510009	油缸(L)Φ50xΦ40x1751	Cylinder (L)Φ50xΦ40x1751(H=5500)	1	2.5T
B	255044510010	油缸(L)Φ50xΦ40x1884	Cylinder (L)Φ50xΦ40x1884(H=6000)	1	2.5T
B	255044510107	油缸(L)Φ50xΦ40x2017	Cylinder (L)Φ50xΦ40x2017H=6500)	1	2.5T
B	256144516001	油缸(L)(H=3600)	Cylinder (L)Φ56xΦ45x1174(H=3600)	1	2.8-3.5T
B	256144516002	油缸(L)(H=4000)	Cylinder (L)Φ56xΦ45x1312(H=4000)	1	2.8-3.5T
B	256144516003	油缸(L)(H=4300)	Cylinder (L)Φ56xΦ45x1424(H=4300)	1	2.8-3.5T
B	256144516004	油缸(L)(H=4500)	Cylinder (L)Φ56xΦ45x1474(H=4500)	1	2.8-3.5T
B	256144516005	油缸(L)(H=4700)	Cylinder (L)Φ56xΦ45x1539(H=4700)	1	2.8-3.5T
B	256144516006	油缸(L)(H=4800)	Cylinder (L)Φ56xΦ45x1574H=4800)	1	2.8-3.5T
B	256144516007	油缸(L)(H=5000)	Cylinder (L)Φ56xΦ45x1617(H=5000)	1	2.8-3.5T
B	256144516008	油缸(L)(H=5400)	Cylinder (L)Φ56xΦ45x1717(H=5400)	1	2.8-3.5T
B	256144516009	油缸(L)(H=5500)	Cylinder (L)Φ56xΦ45x1751(H=5500)	1	2.8-3.5T
B	256144516010	油缸(L)(H=6000)	Cylinder (L)Φ56xΦ45x1884(H=6000)	1	2.8-3.5T

256898501047 起升油缸(三级全自由门架)/LIFTING CYLINDER (three stage full free)

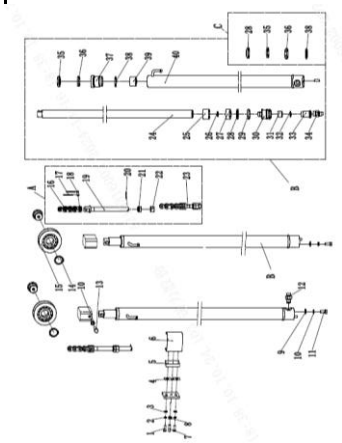

序号/NO	编码/SN	名称	Name	数量/QTY	备注/Remark
B	256144516011	油缸(L)(H=6500)	Cylinder (L)Φ56xΦ45x2017(H=6000)	1	2.8-3.5T
	256144517001	油缸(R)(H=3600)	CyRinder (R)Φ56xΦ45x1174(H=3600)	1	2.8-3.5T
	256144517002	油缸(R)(H=4000)	CyRinder (R)Φ56xΦ45x1312(H=4000)	1	2.8-3.5T
	256144517003	油缸(R)(H=4300)	CyRinder (R)Φ56xΦ45x1424(H=4300)	1	2.8-3.5T
	256144517004	油缸(R)(H=4500)	CyRinder (R)Φ56xΦ45x1474(H=4500)	1	2.8-3.5T
	256144517005	油缸(R)(H=4700)	CyRinder (R)Φ56xΦ45x1539(H=4700)	1	2.8-3.5T
	256144517006	油缸(R)(H=4800)	CyRinder (R)Φ56xΦ45x1574(H=4800)	1	2.8-3.5T
	256144517007	油缸(R)(H=5000)	CyRinder (R)Φ56xΦ45x1617(H=5000)	1	2.8-3.5T
	256144517008	油缸(R)(H=5400)	CyRinder (R)Φ56xΦ45x1717(H=5400)	1	2.8-3.5T
	256144517009	油缸(R)(H=5500)	CyRinder (R)Φ56xΦ45x1751(H=5500)	1	2.8-3.5T
	256144517010	油缸(R)(H=6000)	CyRinder (R)Φ56xΦ46x1884(H=6000)	1	2.8-3.5T
	256144517011	油缸(R)(H=6500)	CyRinder (R)Φ56xΦ45x2017H=6000)	1	2.8-3.5T
	255044510108	油缸(R)(H=3600)	CyRinder (R)Φ50xΦ40x1174(H=3600)	1	2.5T
	255044510011	油缸(R)(H=4000)	CyRinder (R)Φ50xΦ40x1312(H=4000)	1	2.5T
	255044510012	油缸(R)(H=4300)	CyRinder (R)Φ50xΦ40x1424(H=4300)	1	2.5T
	255044510013	油缸(R)(H=4500)	CyRinder (R)Φ50xΦ40x1474(H=4500)	1	2.5T
	255044510109	油缸(R)(H=4700)	CyRinder (R)Φ50xΦ40x1539H=4700)	1	2.5T
	255044510014	油缸(R)(H=4800)	CyRinder (R)Φ50xΦ40x1574(H=4800)	1	2.5T
	255044510015	油缸(R)(H=5000)	CyRinder (R)Φ50xΦ40x1617(H=5000)	1	2.5T
	255044510110	油缸(R)(H=5400)	CyRinder (R)Φ50xΦ40x1717(H=5400)	1	2.5T
	255044510016	油缸(R)(H=5500)	CyRinder (R)Φ50xΦ40x1751(H=5500)	1	2.5T
	255044510017	油缸(R)(H=6000)	CyRinder (R)Φ50xΦ40x1884(H=6000)	1	2.5T
	255044510111	油缸(R)(H=6500)	CyRinder (R)Φ50xΦ40x2017H=6000)	1	
C	256198510003	30-35N密封件修理包(三级全自由起升缸)	Seal kits(three stage full free lifting cylinder)	2	包含/Inc: 27.29.34.35.37
C	255098510003	25N密封件修理包(三级全自由起升缸)	Seal kits(three stage full free lifting cylinder)	2	包含/Inc: 27.29.34.35.37
1	910100300023	螺栓GB5783-M8x25-8.8	Bolt GB5783-M8x25-8.8	4	
2	910400500007	弹簧垫圈GB93-10	Washer GB93-10	4	
3	910400100007	平垫圈GB97.1-10-200HV	Washer GB97.1-10-200HV	4	
4	255044520099	橡胶垫	Rubber pad	2	
5	255044520097	支撑块	Support block	2	
6	255044520098	弯板	Blendboard	2	2.5-3.5T

256898501047起升油缸(三级全自由门架)/LIFTING CYLINDER (three stage full free)

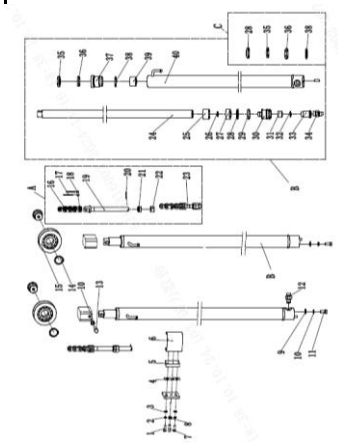

序号/NO	编码/SN	名称	Name	数量/QTY	备注/Remark
7	910300100007	螺钉M10x35-8.8	Screw M10x35-8.8	2	
8	941100100003	螺母GB6170-M10-10	Nut GB6170-M10-10	2	
9	910400100008	平垫圈GB97.1-12-200HV	Washer GB97.1-12-200HV	2	
10	910400500008	弹簧垫圈GB93-12	Washer GB93-12	2	
11	910100400009	螺栓GB5786-M12x1.25x25-8.8	Bolt GB5786-M12x1.25x25-8.8	2	
12	255098520001	防爆阀-2T	Explosion proof valve -2T	1	2.5T
12	256898520001	防爆阀-3T	Explosion proof valve -3T	1	2.8-3.5T
13	910100400029	螺栓GB5786-M16x1.5x40-8.8	Bolt GB5786-M16x1.5x40-8.8	2	
14	910401300020	轴用弹性挡圈GB894.1-40	Circlip GB894.1-40	2	2.5-3.5T
15	940200500003	链轮轴承780708K1-Φ72xΦ30x21	Chain wheel bearing 780708K-Φ72xΦ30x21	2	2.5-3.5T
16	910900400014	板式链GB6074-LH1623	LH1623 chain	1	2.5-3.5T
17	910600600022	开口销GB91-2.5x40	Cotter Pin GB91-2.5x40	2	2.5-3.5T
18	255044020146	销轴Φ9.5x25	Pin axis Φ 9.5x25	2	2.5-3.5T
19	255044020157	链条螺栓M18x1.5x217	Chain bolt M18x1.5x217	2	2.5-3.5T
20	910600600030	开口销GB91-3.2x30	Split pin 3.2x30	2	2.5-3.5T
21	255044020158	球面螺母M18x1.5	Nut M18x1.5	2	2.5-3.5T
22	910300200012-D02	螺母GB6171-M18x1.5-10(黑)	Nut M18x1.5	2	2.5-3.5T
23	275344520007	链条螺栓M18x1.5x102	Chain bolt M18x1.5x102	2	2.5-3.5T
24	▲	活塞杆	Piston rod	1	
25	▲	调整套35.5x44xL1	Adjusting bushing 35.5x44xL1	1	
26	▲	钢丝挡圈	Circlip	1	
27	▲	支承环41x45x8	41 x45x8 bearing ring	1	
28	▲	孔用密封圈	Seal ring 45x35x6	1	
29	▲	挡片35x45x3	35 x45x3 block slice	1	
30	▲	活塞	Piston	1	
31	▲	铜套	Copper bushing	1	
32	▲	钢丝挡圈	Circlip	1	
33	▲	缓冲环	Buffer ring	1	
34	▲	防爆阀	Anti-explosion valve	1	
35	▲	防尘圈DH35X43X6.5	Dust ring	1	
36	▲	轴用密封圈35X45X6	Seal ring	1	

256898501047起升油缸(三级全自由门架)/LIFTING CYLINDER (three stage full free)

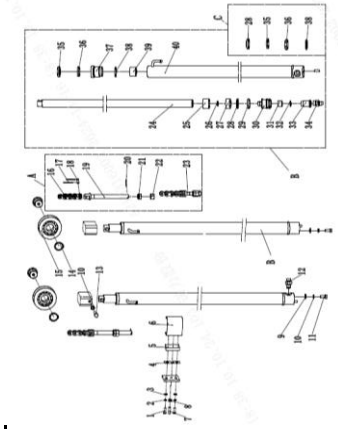

序号/NO	编码/SN	名称	Name	数量/QTY	备注/Remark
37	▲	导向套	Guide bushing	1	
38	▲	O型密封圈	O seal ring	1	
39	▲	钢背轴承3530	Bearing 3530	1	
40	▲	缸体	Cylinder	1	

256898501048 起升管路(三级全自由门架)/LIFTING CYLINDER (three stage full free)

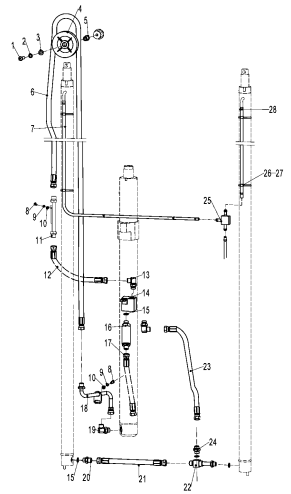

序号/NO	编码/SN	名称	Name	数量/QTY	备注/Remark
1	910100100048	螺栓GB5782-M12x50-8.8	Bolt GB5782-M12x50-8.8	1	
2	910400500008	弹簧垫圈GB93-12	Spring washer gb93-12	1	
3	910400100008	平垫圈GB97.1-12-200HV	Flat washer GB97.1-12-200HV	1	
4	255044520096	滑轮Φ120x36(单槽)	Pulley Φ120x36 (single slot)	1	
5	255044520081	衬套(带肩)Φ20xΦ13x28	Bushings (shoulder)Φ20xΦ13x28	1	
6	255044520084	液压管总成 (直) 15-L1910-2SC-60	Hydraulic hose assembly 15-L1910-2SC-60	1	H=3600
6	255044520071	液压管总成（直）15-L2180-2SC-60°	Hydraulic hose assembly 15-L2180-2SC-60°	1	H=4000
6	255044520072	液压管总成（直）15-L2430-2SC-60°	Hydraulic hose assembly 15-L2430-2SC-60°	1	H=4350
6	255044520073	液压管总成（直）15-L2530-2SC-60°	Hydraulic hose assembly 15-L2530-2SC-60°	1	H=4500
6	255044520074	液压管总成（直）15-L2730-2SC-60°	Hydraulic hose assembly 15-L2730-2SC-60°	1	H=4700/4800
6	255044520075	液压管总成（直）15-L3015-2SC-60°	Hydraulic hose assembly 15-L3015-2SC-60°	1	H=5000
6	255044520076	液压管总成（直）15-L3480-2SC-60°	Hydraulic hose assembly 15-L3480-2SC-60°	1	H=5400/5500
6	255044520077	液压管总成（直）15-L3950-2SC-60°	Hydraulic hose assembly 15-L3950-2SC-60°	1	H=6000
6	255044520124	液压管总成（直）15-L4410-2SC-60°	Hydraulic hose assembly 15-L4410-2SC-60°	1	H=6500
7	900200301004	PE软管Φ10xΦ13	PE Supple pipeΦ10xΦ13	3	
8	910100300022	螺栓GB5783-M8x20-8.8	Bolt GB5783-M8x20-8.8	3	
9	910400500006	弹簧垫圈GB93-8	Spring washer GB93-8	5	
10	910400100006	平垫圈GB97.1-8-200HV	Flat washer GB97.1-8-200HV	5	
11	255044510020	液压钢管焊合1	Hydraulic pipe welding 1	1	
12	255044520083	液压管总成(直)15-L530-2SC-60°	Hydraulic hose assembly 15-L530-2SC-60°	1	
13	255044020151	接头(锁定弯)12-2xM22x1.5-60°	Connector (lock bend) 12-2xM22x1.5-60°	1	
14	252144519002	三通焊合(20Q)	Tee welded (20Q)	1	
15	910800100040	O形圈-外24x2.4	O - inner 24x2.4	4	
16	950700300002	限速阀XSF-F16L-48	The speed limit valve XSF-F16L-48	1	
17	252144529003	液压管总成(直)15-L800-2SC-60°	Hydraulic hose assembly 15-L800-2SC-60°	1	
18	255044510021	液压钢管焊合2	Hydraulic pipe welding 2	1	
19	255043520022	接头（锁定弯）12-M27x2-M22x1.5	Connector (lock bend) 12-M27x2-M22x1.5	1	
20	256898520001	防爆阀	explosion-proof valve	1	
21	255044520067	液压管总成(直)15-L360-2SC-60°	Hydraulic hose assembly 15-L360-2SC-60°	1	
22	255044010040	接头(三通)	Connector (tee)	1	
23	254144520048	液压管总成(90°)15-L800-2SC-60°	Hydraulic hose assembly (90°)15-L800-2SC-60°	1	

256898501048 起升管路(三级全自由门架)/LIFTING CYLINDER (three stage full free)

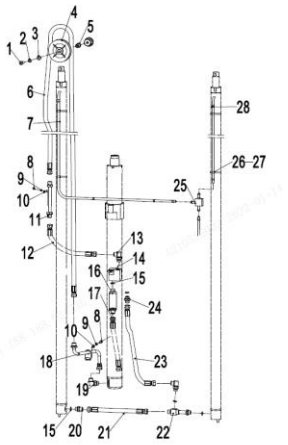

序号/NO	编码/SN	名称	Name	数量/QTY	备注/Remark
24	255023520030	接头(直)12-2xM22x1.5-60°	Connector12-2xM22x1.5-60°	1	
25	255044020118	接头(三通)	Connector (tee)	1	
26	921600400001	扎带4x250	4 x250 tie	6	
27	255044020042	压板	clamp	4	
28	255044020043	卡箍13	Clamp 13	6	

256898501049 侧移器及管路安装(三级全自由)/Side shifter and pipeline installation(three stage full free)

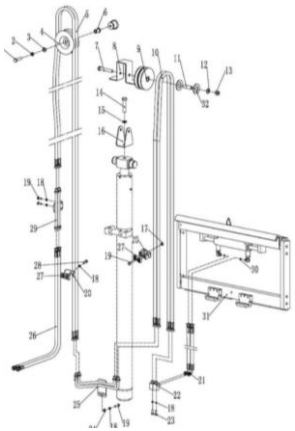

序号/NO	编码/SN	名称	Name	数量/QTY	备注/Remark
1	910100100048	螺栓GB5782-M12x50-8.8	BoltGB5782-M12x50-8.8	1	
2	910400500008	弹簧垫圈GB93-12	Washer GB93-12	1	
3	910400100008	平垫圈GB97.1-12-200HV	Washer GB97.1-12-200HV	2	
4	255030520020	滑轮Φ120x42(双槽)	Pulley Φ120 x42 (dual slot)	1	
5	255023520036	液压管总成 (直)10-L1800-1SC-60°	Hydraulic hose assembly 10-L1800-1SC-60°	2	H=3600
5	255030520001	液压管总成 (直)10-L2060-1SC-60°	Hydraulic hose assembly 10-L2060-1SC-60°	2	H=4000
5	255030520002	液压管总成（直）10-L2310-1CS-60°	Hydraulic hose assembly 10-L2310-1SC-60°	2	H=4300
5	255030520003	液压管总成（直）10-L2410-1CS-60°	Hydraulic hose assembly 10-L2410-1SC-60°	2	H=4500
5	255030520004	液压管总成（直）10-L2610-1CS-60°	Hydraulic hose assembly 10-L2610-1SC-60°	2	H=4800/4700
5	255030520005	液压管总成（直）10-L2900-1CS-60°	Hydraulic hose assembly 10-L2900-1SC-60°	2	H=5000
5	255030520006	液压管总成（直）10-L3370-1CS-60°	Hydraulic hose assembly 10-L3370-1SC-60°	2	H=5500/5400
5	255030520007	液压管总成（直）10-L3840-1CS-60°	Hydraulic hose assembly 10-L3840-1SC-60°	2	H=6000
5	263030520008	液压管总成（直）10-L4330-1CS-60°	Hydraulic hose assembly 10-L4330-1SC-60°	2	H=6500
6	255030520023	衬套1	Bushing	1	
7	910100100058	螺栓GB5782-M12x100-8.8	Bolt GB5782-M12x100-8.8	1	
8	255028520043	挡板	Chain plate	1	
9	255030520021	滑轮φ110x27(单槽)	Pulley φ110x27	2	
10	255023520036	液压管总成 (直)10-L1800-1SC-60°	Hydraulic hose assembly 10-L1800-1SC-60°	2	H=3600
10	255028520016	液压管总成 (直)10-L1930-1SC-60°	Hydraulic hose assembly 10-L1930-1SC-60°	2	H=4000
10	275323521007	液压管总成 (直)10-L2040-1SC-60°	Hydraulic hose assembly 10-L2040-1SC-60°	2	H=4350
10	255030520711	液压管总成 (直)10-L2090-1SC-60°	Hydraulic hose assembly 10-L2090-1SC-60°	2	H=4500
10	263030520015	液压管总成 (直)10-L2160-1SC-60°	Hydraulic hose assembly 10-L2160-1SC-60°	2	H=4800/4700
10	255028520045	液压管总成 (直)10-L2300-1SC-60°	Hydraulic hose assembly 10-L2300-1SC-60°	2	H=5000
10	281229020031	液压管总成 (直)10-L2500-1SC-60°	Hydraulic hose assembly 10-L2500-1SC-60°	2	H=5500/5400
10	254131020006	液压管总成 (直)10-L2750-1SC-60°	Hydraulic hose assembly 10-L2750-1SC-60°	2	H=6000
10	281229020023	液压管总成 (直)10-L2975-1SC-60°	Hydraulic hose assembly 10-L2975-1SC-60°	2	H=6500
11	255030520022	衬套Φ22xΦ13x56	Bush Φ22xΦ13x56	1	
12	910400100008	平垫圈GB97.1-12-200HV	Washer GB97.1-12-200HV	2	
13	910300500006	螺母GB889.1-M12-10	Nut GB889.1-M12-10	1	
14	910100100072	螺栓GB5782-M16x60-8.8	Bolt GB5782-M16x60-8.8	1	
15	910400100010	平垫圈GB97.1-16-200HV	Washer GB97.1-16-200HV	1	

256898501049 侧移器及管路安装(三级全自由)/Side shifter and pipeline installation(three stage full free)

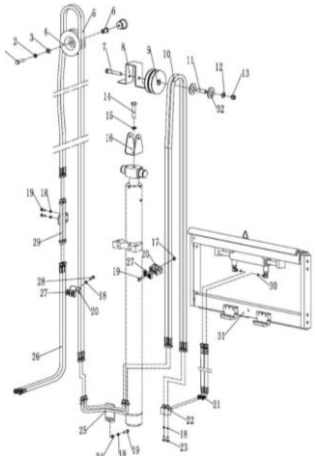

序号/NO	编码/SN	名称	Name	数量/QTY	备注/Remark
16	255030520026	滑轮架体	Pulley frame	1	
17	910300500004	螺母GB889.1-M8-10	Nut GB889.1-M8-10	1	
18	910400100006	弹簧垫圈GB93-8	Washer GB93-8	5	
19	910200200061	螺钉GB70.1-M8x40-8.8	Bolt GB5783-M8x20-8.8	1	
20	255028520035	管夹安装板	Pipe press fixedly piank	2	
21	255042520101	液压管总成(90°)10-L500-1SC-60°-0°	Hydraulic hose assembly(90°)10-L500-1SC-60°	2	
22	255029020024	接头(锁定弯)8-2xM16x1.5-60°	Joint 8-2XM16x1.5-60°	2	
23	910100300025	螺栓GB5783-M8x35-8.8	Bolt GB5783-M8x35-8.8	2	
24	910400500006	平垫圈GB97.1-8-200HV	Washer GB97.1-8-200HV	5	
25	255030520019	液压钢管焊合2	Hydraulic steel pipe welding 2	1	
26	255030520017	液压管总成(直)10-L1450-1SC-60°	Hydraulic hose assembly10-L1450-1SC-60°	2	
27	255028520034	胶管固定块	Hose fixing bloke	4	
28	910200200060	螺钉GB70.1-M8x35-8.8	Screw GB70.1-M8x35-8.8	1	
29	255030520018	液压钢管焊合	Hydraulic steel pipe welding	1	
30	910800100042	O形圈-外13.6x2.4	Oring 13.6x2.4	2	
31	255042510004	侧移器总成(LH)	Side shiifter assembly(LH)	1	选装/optional
31	255042510001	侧移器总成(LD)	Side shiifter assembly(LD)	1	选装/optional
31	255042510002	侧移器总成(卡斯卡特)	Side shiifter assembly(CASCADE)	1	选装/optional
32	910400200005	大垫圈GB96.1-12-200HV	Washer GB96.1-12-200HV	2	

256898501050 双附加管路(三级全自由)/DOUBLE ADDITIONAL TUBE(three stage full free)

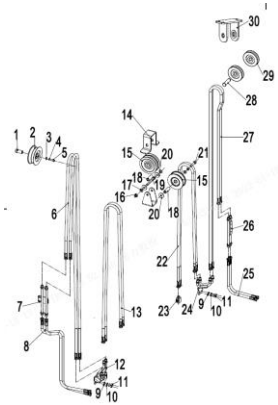

序号/NO	编码/SN	名称	Name	数量/QTY	备注/Remark
1	254130520016	衬套Φ20xΦ13x43	Bush Φ20xΦ13x43	1	
2	255030520020	滑轮Φ120x42(双槽)	Pulley Φ120x42	1	
3	910400500008	弹簧垫圈GB93-12	WasherGB93-12	1	
4	910400100008	平垫圈GB97.1-12-200HV	Washer GB97.1-12-200HV	1	
5	910100100048	螺栓GB5782-M12x50-8.8	Bolt GB5782-M12x50-8.8	1	
6	255023520036	液压管总成 (直)10-L1800-1SC-60°	Hydraulic hose assembly 10-L1800-1SC-60°	2	H=3600
6	255030520001	液压管总成 (直)10-L2060-1SC-60°	Hydraulic hose assembly 10-L2060-1SC-60°	2	H=4000
6	255030520002	液压管总成（直）10-L2310-1CS-60°	Hydraulic hose assembly 10-L2310-1SC-60°	2	H=4300
6	255030520003	液压管总成（直）10-L2410-1CS-60°	Hydraulic hose assembly 10-L2410-1SC-60°	2	H=4500
6	255030520004	液压管总成（直）10-L2610-1CS-60°	Hydraulic hose assembly 10-L2610-1SC-60°	2	H=4800/4700
6	255030520005	液压管总成（直）10-L2900-1CS-60°	Hydraulic hose assembly 10-L2900-1SC-60°	2	H=5000
6	255030520006	液压管总成（直）10-L3370-1CS-60°	Hydraulic hose assembly 10-L3370-1SC-60°	2	H=5500/5400
6	255030520007	液压管总成（直）10-L3840-1CS-60°	Hydraulic hose assembly 10-L3840-1SC-60°	2	H=6000
6	263030520008	液压管总成（直）10-L4330-1CS-60°	Hydraulic hose assembly 10-L4330-1SC-60°	2	H=6500
7	255030520018	液压钢管焊合1	Hydraulic steel pipe welding 1	1	
8	255030520017	液压管总成(直)10-L1450-1SC-60°	Hydraulic hose assembly 10-L1450-1SC-60°	2	
9	910400100006	平垫圈GB97.1-8-200HV	Washer GB97.1-8-200HV	5	
10	910400500006	弹簧垫圈GB93-8	WasherGB93-8	8	
11	910100300022	螺栓GB5783-M8x20-8.8	Bolt GB5783-M8x20-8.8	7	
12	255030520019	液压钢管焊合2	Hydraulic steel pipe welding 2	1	
13	255023520036	液压管总成 (直)10-L1800-1SC-60°	Hydraulic hose assembly 10-L1800-1SC-60°	2	H=3600
13	255028520016	液压管总成 (直)10-L1930-1SC-60°	Hydraulic hose assembly 10-L1930-1SC-60°	2	H=4000
13	275323521007	液压管总成 (直)10-L2040-1SC-60°	Hydraulic hose assembly 10-L2040-1SC-60°	2	H=4350
13	255030520711	液压管总成 (直)10-L2090-1SC-60°	Hydraulic hose assembly 10-L2090-1SC-60°	2	H=4500
13	263030520015	液压管总成 (直)10-L2160-1SC-60°	Hydraulic hose assembly 10-L2160-1SC-60°	2	H=4800/4700
13	255028520045	液压管总成 (直)10-L2300-1SC-60°	Hydraulic hose assembly 10-L2300-1SC-60°	2	H=5000
13	281229020031	液压管总成 (直)10-L2500-1SC-60°	Hydraulic hose assembly 10-L2500-1SC-60°	2	H=5500/5400
13	254131020006	液压管总成 (直)10-L2750-1SC-60°	Hydraulic hose assembly 10-L2750-1SC-60°	2	H=6000
13	281229020023	液压管总成 (直)10-L2975-1SC-60°	Hydraulic hose assembly 10-L2975-1SC-60°	2	H=6500
14	255028520043	挡板	Chain plate	1	
15	255030520021	滑轮Φ110x27(单槽)	Pulley Φ110x27	4	

256898501051 双附加管路(三级全自由)/DOUBLE ADDITIONAL TUBE(three stage full free)

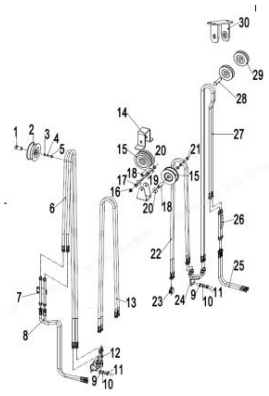

序号/NO	编码/SN	名称	Name	数量/QTY	备注/Remark
16	910300500006	螺母GB889.1-M12-10	Nut GB889.1-M12-10	1	
17	910400100008	平垫圈GB97.1-12-200HV	Washer GB97.1-12-200HV	1	
18	255030520022	衬套Φ20xΦ13x56	BushΦ20xΦ13x56	1	
19	910100100058	螺栓GB5782-M12x100-8.8	Bolt GB5782-M12x100-8.8	1	
20	910400200005	大垫圈GB96.1-12-200HV	Washer GB96.1-12-200HV	2	
21	910100100056	螺栓GB5782-M12x90-8.8	Bolt GB5782-M12x90-8.8	1	
22	275230529021	液压管总成(直)10-L1600-1SC-60°	Hydraulic hose assembly 10-L1600-1SC-60°	2	H=3600
22	255030520024	液压管总成(直)10-L1720-1SC-60°	Hydraulic hose assembly 10-L1720-1SC-60°	2	H=4000
22	254130520005	液压管总成(直)10-L1890-1SC-60°	Hydraulic hose assembly 10-L1890-1SC-60°	2	H=4350/4500
22	255031020705	液压管总成(直)10-L1980-1SC-60°	Hydraulic hose assembly 10-L1980-1SC-60°	2	H=4800/4700
22	255028520044	液压管总成(直)10-L2150-1SC-60°	Hydraulic hose assembly 10-L2150-1SC-60°	2	H=5000
22	254128520031	液压管总成(直)10-L2350-1SC-60°	Hydraulic hose assembly 10-L2350-1SC-60°	2	H=5400/5500
22	255031020016	液压管总成(直)10-L2550-1SC-60°	Hydraulic hose assembly 10-L2550-1SC-60°	2	J=6000
22	255031020703	液压管总成(直)10-L2780-1SC-60°	Hydraulic hose assembly 10-L2780-1SC-60°	2	H=6500
23	255029020024	接头(锁定弯)8-2xM16x1.5-60°	Joint 8-2XM16x1.5-60°	4	
24	255031020006	液压钢管焊合	Hydraulic steel pipe welding	1	
25	255031020008	液压管总成(135°)10-L1000-1SC-60°	Hydraulic hose assembly (135°)10-L1000-1SC-6	2	
26	255028510022	过渡钢管	Excessive pipe welding	1	
27	254130520007	液压管总成(直)10-L2140-1SC-60°	Hydraulic hose assembly 10-L2140-1SC-60°	2	H=3600
27	255030520003	液压管总成(直)10-L2410-1SC-60°	Hydraulic hose assembly 10-L2410-1SC-60°	2	H=4000
27	254128520052	液压管总成(直)10-L2650-1SC-60°	Hydraulic hose assembly 10-L2650-1SC-60°	2	H=4350
27	254131020006	液压管总成(直)10-L2750-1SC-60°	Hydraulic hose assembly 10-L2750-1SC-60°	2	H=4500
27	254131020007	液压管总成(直)10-L2950-1SC-60°	Hydraulic hose assembly 10-L2950-1SC-60°	2	H=4700/4800
27	254128520039	液压管总成(直)10-L3250-1SC-60°	Hydraulic hose assembly 10-L3250-1SC-60°	2	H=5000
27	275344529012	液压管总成(直)10-L3350-1SC-60°	Hydraulic hose assembly 10-L3350-1SC-60°	2	H=5400/5500
27	255031020017	液压管总成(直)10-L3720-1SC-60°	Hydraulic hose assembly 10-L3720-1SC-60°	2	H=6000
27	252127521001	液压管总成(直)10-L4150-1SC-60°	Hydraulic hose assembly 10-L4150-1SC-60°	1	H=6500
28	255031020004	带耳轴Φ20x70	Axle Φ20x70	1	
29	255031020007	滑轮Φ90x22(单槽)	Pulley Φ90x22	2	
30	255031010001	滑轮支架焊合1	Pulley support welded 1	1	H>5400
30	255031010002	滑轮支架焊合2	Pulley support welded 2	1	H<=5400

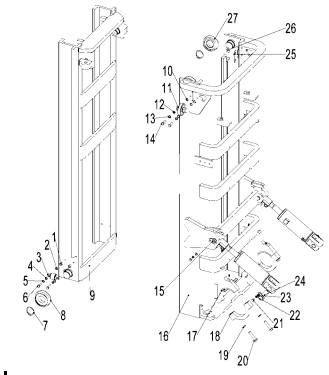

256898501051 门架(两级全自由门架)/MAST(two stage full free)

序号/NO	编码/SN	名称	Name	数量/QTY	备注/Remark
1	910100300039	螺栓GB5783-M10x40-8.8	Bolt GB5783-M10x40-8.8	4	
2	910400500007	弹簧垫圈GB93-10	Washer GB93-10	8	
3	910400100007	平垫圈GB97.1-10-200HV	Washer GB97.1-10-200HV	4	
4	255038020009	调整垫	Adjustable pad	8	
5	255038020008	调整套	Adjusting sleeve	4	
6	940200200005	侧滚轮Φ42-CD=68	Side rollerΦ42 - CD = 68	2	
7	910401300024	轴用弹性挡圈	Elastic retaining ring for shaft	4	
8	940200100021	主滚轮Φ119.6xΦ55x34	Roller Φ119.6xΦ55x34	2	选配
8	940200100022	主滚轮Φ120xΦ55x34	Roller Φ120xΦ55x34	2	选配
9	256843512001	内门架焊合 2000	Inner mast(2000)	1	2.8-3.5t
9	256843512002	内门架焊合 2500	Inner mast 2500	1	2.8-3.5t
9	256843512003	内门架焊合 3000	Inner mast 3000	1	2.8-3.5t
9	256843512004	内门架焊合 3300	Inner mast 3300	1	2.8-3.5t
9	256843512005	内门架焊合 3500	Inner mast 3500	1	2.8-3.5t
9	256843512006	内门架焊合 3600	Inner mast 3600	1	2.8-3.5t
9	256843512007	内门架焊合 3700	Inner mast 3700	1	2.8-3.5t
9	256843512008	内门架焊合 4000	Inner mast 4000	1	2.8-3.5t
9	256843512009	内门架焊合 4300	Inner mast 4300	1	2.8-3.5t
9	256843512010	内门架焊合 4500	Inner mast 4500	1	2.8-3.5t
9	256843512011	内门架焊合 5000	Inner mast 5000	1	2.8-3.5t
9	256843512012	内门架焊合 5500	Inner mast 5500	1	2.8-3.5t
9	256843512013	内门架焊合 6000	Inner mast 6000	1	2.8-3.5t
9	255043510027	内门架焊合 2000	Inner mast(2000)	1	2.5t
9	255043510028	内门架焊合 2500	Inner mast 2500	1	2.5t
9	255043510029	内门架焊合 3000	Inner mast 3000	1	2.5t
9	255043510030	内门架焊合 3300	Inner mast 3300	1	2.5t
9	255043510031	内门架焊合 3500	Inner mast 3500	1	2.5t
9	255043510032	内门架焊合 3600	Inner mast 3600	1	2.5t
9	255043510033	内门架焊合 3700	Inner mast 3700	1	2.5t
9	255043510034	内门架焊合 4000	Inner mast 4000	1	2.5t
9	255043510035	内门架焊合 4300	Inner mast 4300	1	2.5t

256898501051 门架(两级全自由门架)/MAST(two stage full free)

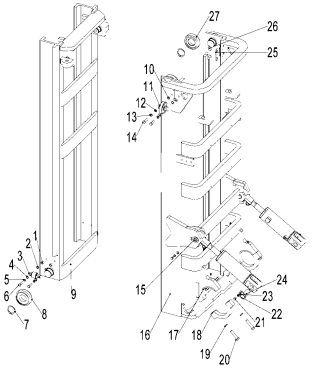

序号/NO	编码/SN	名称	Name	数量/QTY	备注/Remark
9	255043510036	内门架焊合 4500	Inner mast 4500	1	2.5t
9	255043510037	内门架焊合 5000	Inner mast 5000	1	2.5t
9	255043510038	内门架焊合 5500	Inner mast 5500	1	2.5t
9	255043510039	内门架焊合 6000	Inner mast 6000	1	2.5t
10	910100300050	螺栓GB5783-M12x30-8.8	Bolt GB5783-M12x30-8.8	4	
11	910400100008	平垫圈GB97.1-12-200HV	Washer GB97.1-12-200HV	4	
12	256544020701	垫圈Φ20xΦ13x0.5	Washer Φ20xΦ13x0.5	4	
12	256544020702	垫圈Φ20xΦ13x1	Washer Φ20xΦ13x1	4	
12	256544020703	垫圈Φ20xΦ13x0.2	Washer Φ20xΦ13x0.2	4	
13	910400500008	弹簧垫圈GB93-12	Washer GB93-12	4	
14	940200200002	侧滚轮Φ87-CD=55	Side roller Φ87-CD=55	2	
15	256844510001	带耳轴Φ30x94		2	3.0-3.5t
16	256844011001	外门架焊合 2000	Outer mast 2000	1	3.0-3.5t
16	256844011002	外门架焊合 2500	Outer mast 2500	1	3.0-3.5t
16	256844011003	外门架焊合 3000	Outer mast 3000	1	3.0-3.5t
16	256844011004	外门架焊合 3300	Outer mast 3300	1	3.0-3.5t
16	256844011005	外门架焊合 3500	Outer mast 3500	1	3.0-3.5t
16	256844011006	外门架焊合 3600	Outer mast 3600	1	3.0-3.5t
16	256844011007	外门架焊合 3700	Outer mast 3700	1	3.0-3.5t
16	256844011008	外门架焊合 4000	Outer mast 4000	1	3.0-3.5t
16	256844011009	外门架焊合 4300	Outer mast 4300	1	3.0-3.5t
16	256844011010	外门架焊合 4500	Outer mast 4500	1	3.0-3.5t
16	256844011011	外门架焊合 5000	Outer mast 5000	1	3.0-3.5t
16	256844011012	外门架焊合 5500	Outer mast 5500	1	3.0-3.5t
16	256844011013	外门架焊合 6000	Outer mast 6000	1	3.0-3.5t
16	256743511001	外门架焊合 2000	Outer mast 2000	1	2.5-2.8t
16	256743511002	外门架焊合 2500	Outer mast 2500	1	2.5-2.8t
16	256743511003	外门架焊合 3000	Outer mast 3000	1	2.5-2.8t
16	256743511004	外门架焊合 3300	Outer mast 3300	1	2.5-2.8t
16	256743511005	外门架焊合 3500	Outer mast 3500	1	2.5-2.8t
16	256743511006	外门架焊合 3600	Outer mast 3600	1	2.5-2.8t

256898501051 门架(两级全自由门架)/MAST(two stage full free)

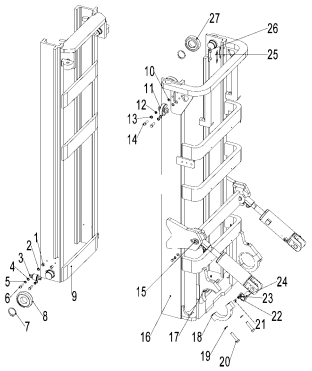

序号/NO	编码/SN	名称	Name	数量/QTY	备注/Remark
16	256743511007	外门架焊合 3700	Outer mast 3700	1	2.5-2.8t
16	256743511008	外门架焊合 4000	Outer mast 4000	1	2.5-2.8t
16	256743511009	外门架焊合 4300	Outer mast 4300	1	2.5-2.8t
16	256743511010	外门架焊合 4500	Outer mast 4500	1	2.5-2.8t
16	256743511011	外门架焊合 5000	Outer mast 5000	1	2.5-2.8t
16	256743511012	外门架焊合5500	Outer mast 5500	1	2.5-2.8t
16	256743511013	外门架焊合 6000	Outer mast 6000	1	2.5-2.8t
17	254144020063	轴瓦	Bearing bush	2	
18	255044020005	支座盖	Bearing cover	2	
19	910400500010	弹簧垫圈GB93-16	Washer GB93-16	6	
20	910100200016	螺栓GB5785-M16x1.5x70-8.8	Bolt GB5785-M16x1.5x70-8.8	4	
21	910100300035	螺栓GB5783-M10x20-8.8	Bolt GB5783-M10x20-8.8	4	
22	910400100007	平垫圈GB97.1-10-200HV	Washer GB97.1-10-200HV	8	
23	910400500007	弹簧垫圈GB93-10	Washer GB93-10	8	
24	255044010057	带耳轴Φ30x82	AxleΦ30x82	2	
25	255044020132	调整垫片t=0.8	Adjusting pad t=0.8	2	
25	255044020133	调整垫片t=0.5	Adjusting pad t=0.5	2	
25	255044020134	调整垫片t=0.2	Adjusting pad t=0.2	2	
26	255044020131	垫板	Base plate	2	
27	940200100024	主滚轮Φ111xΦ55x32	Roller Φ111xΦ55x32	2	

256898501052货叉架(两级全自由门架)/FORK ARM CARRIER(two stage full free)

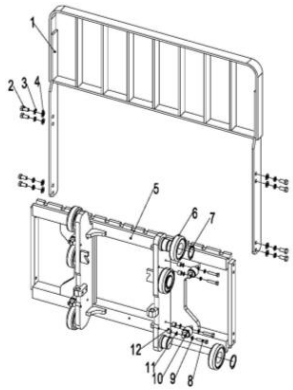

序号/NO	编码/SN	名称	Name	数量/QTY	备注/Remark
1	253540510001	挡货架焊合(1100x1080)	Load backrest welding	1	2.8-3.5t
1	255040510001	挡货架焊合(1040x986)	Load backrest welding 1040X986	1	2.5t
2	910100300062	螺栓GB5783-M14x30-8.8	Bolt GB5783-M14x30-8.8	4	
3	910400500009	弹簧垫圈GB93-14	Washer GB93-14	4	
4	910400100009	平垫圈GB97.1-14-200HV	Washer GB97.1-14-200HV	4	
5	256838012001	货叉架焊合(两级全自由门架）	Fork carrier weldind（two stage full free）	1	2.8-3.5t
5	255038015001	货叉架焊合A(二级全自由门架)	Fork carrier weldind（two stage full free）	1	2.5t
6	940200100020	主滚轮Φ119.2xΦ55x34	Main roller φ119.2xφ55x34	6	选装
6	940200100021	主滚轮Φ119.6xΦ55x34	Main roller φ119.6xφ55x34	6	
6	940200100022	主滚轮Φ120xΦ55x34	Main roller φ120xφ55x34	6	
7	910401300026	轴用弹性挡圈GB894.1-55	Circlip GB894.1-55	6	
8	910100300042	螺栓GB5783-M10x60-8.8	Bolt GB5783-M10x60-8.8	8	
9	910400500007	弹簧垫圈GB93-10	Washer GB93-10	8	
10	940200200005	侧滚轮Φ42-CD=68	Side roller Φ 42 - CD = 68	4	
11	255038020009	调整垫	Adjustable pad	24	
12	255038020008	调整套	Adjusting sleeve	8	

256898501053短起升油缸(两级全自由门架)/SHORT LIFTING CYLINDER (two stage full free)

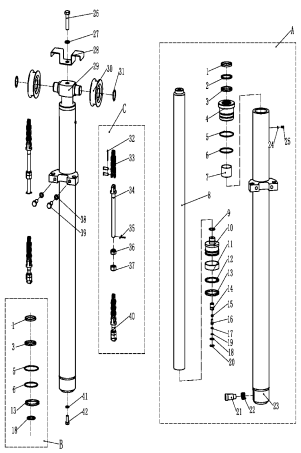

序号/NO	编码/SN	名称	Name	数量/QTY	备注/Remark
A	255043510068	油缸(M)(H=3000)	Cylinder (M)Φ85xΦ60x772(H=3000)	1	包含/Inc.1-25
	255043510066	油缸(M)(H=2000)	Cylinder (M)Φ85xΦ60x522(H=2000)	1	
	255043510067	油缸(M)(H=2500)	Cylinder (M)Φ85xΦ60x647(H=2500)	1	
	255043510069	油缸(M)(H=3300)	Cylinder (M)Φ85xΦ60x847(H=3300)	1	
	255043510070	油缸(M)(H=3500)	Cylinder (M)Φ85xΦ60x897(H=3500)	1	
	255043510071	油缸(M)(H=3600)	Cylinder (M)Φ85xΦ60x922(H=3600)	1	
	255043510072	油缸(M)(H=3700)	Cylinder (M)Φ85xΦ60x947(H=3700)	1	
	255043510073	油缸(M)(H=4000)	Cylinder (M)Φ85xΦ60x1047(H=4000)	1	
	255043510074	油缸(M)(H=4300)	Cylinder (M)Φ85xΦ60x1122(H=4300)	1	
	255043510075	油缸(M)(H=4500)	Cylinder (M)Φ85xΦ60x1172(H=4500)	1	
	255043510076	油缸(M)(H=5000)	Cylinder (M)Φ85xΦ60x1297(H=5000)	1	
	255043510077	油缸(M)(H=5500)	Cylinder (M)Φ85xΦ60x1447(H=5500)	1	
	255043510078	油缸(M)(H=6000)	Cylinder (M)Φ85xΦ60x1572(H=6000)	1	
B	255098510004	密封件修理包(二级全自由中间缸)	Seal kits (two stage full free middle cylinder)	1	包含/Inc.1.3.5.6.13.18
C	256843515001	起升链条LH1634-37	Lifting chain LH1634-37	2	H=2000
	256843515002	起升链条LH1634-47	Lifting chain LH1634-47	2	H=2500
	254043510054	起升链条LH1634-53	Lifting chain LH1634-53	2	H=3000
	256144014005	起升链条LH1634-59	Lifting chain LH1634-59	2	H=3300
	263043510059	起升链条LH1634-63	Lifting chain LH1634-63	2	H=3500
	254043510055	起升链条LH1634-57	Lifting chain LH1634-57	2	H=3600
					H=3700
	254043510056	起升链条LH1634-65	Lifting chain LH1634-65	2	H=4000
	254044010055	起升链条LH1634-71	Lifting chain LH1634-71	2	H=4300
	254043510060	起升链条LH1634-75	Lifting chain LH1634-75	2	H=4500
	256144014007	起升链条LH1634-85	Lifting chain LH1634-85	2	H=5000
	256843515003	起升链条LH1634-97	Lifting chain LH1634-97	2	H=5500
	256144014009	起升链条LH1634-107	Lifting chain LH1634-107	2	H=6000
1	▲	防尘圈	Dust ring 60x74x8/11	1	不单独提供
2	▲	挡片60×70×3	Catch 60×70×3	1	不单独提供
3	▲	轴用密封圈	Seal ring 60×70×6	1	不单独提供
4	▲	导向套	Guide sleeve	1	不单独提供

256898501053 短起升油缸(两级全自由门架)/SHORT LIFTING CYLINDER (two stage full free)

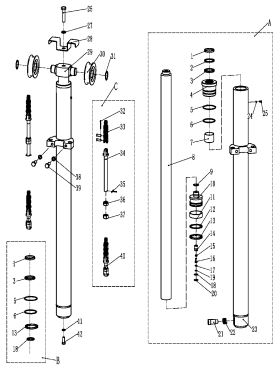

序号/NO	编码/SN	名称	Name	数量/QTY	备注/Remark
5	▲	O型密封圈	O ring 84.4x3.1	1	不单独提供
6	▲	O型密封圈	O ring 77.5×3.55	1	不单独提供
7	▲	钢背轴承6035	Bearing 6035	1	不单独提供
8	▲	活塞杆	Piston rod	1	不单独提供
9	▲	钢丝挡圈	Circlip	1	不单独提供
10	▲	活塞总成	Piston assembly	1	不单独提供
11	▲	支承环D85x20x2.5	Back up ring D85x20x2.5	1	不单独提供
12	▲	挡圈85x70x3	Circlip 85x70x3	1	不单独提供
13	▲	密封圈	Seal ring 85x70x9	1	不单独提供
14	▲	阀套	Valve bushing	1	不单独提供
15	▲	弹簧	Spring	1	不单独提供
16	▲	阀芯	Valve plug	1	不单独提供
17	▲	挡片	Catch	1	不单独提供
18	▲	O型密封圈	O ring D15.8x2.4	1	不单独提供
19	▲	挡圈φ12	Circlip φ12	1	不单独提供
20	▲	挡圈φ22	Circlip φ22	1	不单独提供
21	▲	滑阀	Slide valve	1	不单独提供
22	▲	弹簧	Spring	1	不单独提供
23	▲	缸体	Cylinder	1	不单独提供
24	▲	垫片	Spacer	1	不单独提供
25	▲	螺钉M5x5	Screw M5x5	1	不单独提供
26	910100100071	螺栓GB5782-M16x50-8.8	Bolt GB5782-M16x50-8.8	1	
27	910400500010	弹簧垫圈GB93-16	Washer GB93-16	1	
28	255043520020	挡链板	Chain plate	1	
29	255043520006	缸头	Cylinder head	1	
30	940200500001	链轮轴承780708K-Φ100XΦ40X27	Chain wheel bearing 780708K-Φ100XΦ40X27	1	
31	910401300020	轴用弹性挡圈GB894.1-40	Circlip GB894.1-40	1	
32	910600600022	开口销2.5x40	Split pin2.5x40	2	
33	910900400014	LH1623板式链	LH1623 chain	2	不单独提供
34	255044020157	长端接头	Joint	2	
35	910600600030	开口销3.2x30	Split pin 3.2x30	2	

256898501053 短起升油缸(两级全自由门架)/SHORT LIFTING CYLINDER (two stage full free)

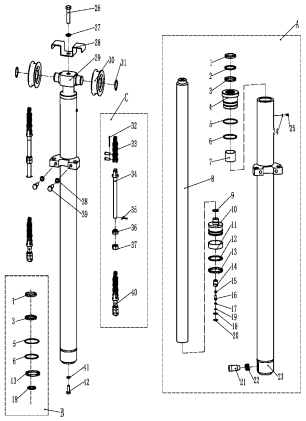

序号/NO	编码/SN	名称	Name	数量/QTY	备注/Remark
36	255044020158	球面螺母M18x1.5	Nut M18x1.5	2	
37	910300400007	螺母M18x1.5	Nut M18x1.5	2	
38	910400500009	弹簧垫圈GB93-14	Washer GB93-14	2	
39	910100400022	螺栓GB5786-M14x1.5x40-8.8	Bolt GB5786-M14x1.5x40-8.8	2	
40	255044020156	短端接头	Joint	2	
41	910400500008	弹簧垫圈GB93-12	SpringWasherGB93-12	1	
42	910100400009	螺栓GB5786-M12x1.25x25-8.8	BoltGB5786-M12x1.25x25-8.8	1	

256898501054 起升油缸(两级全自由门架)/LIFTING CYLINDER (two stage full free)

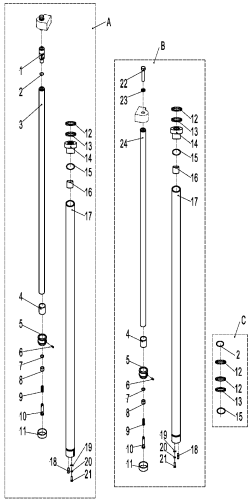

序号/NO	编码/SN	名称	Name	数量/QTY	备注/Remark
A	255043510040	油缸(L)(H=2000)	Cylinder (L)Φ50xΦ40x940(H=2000)	1	包含/Inc.1-21
	255043510041	油缸(L)(H=2500)	Cylinder (L)Φ50xΦ40x1190(H=2500)	1	
	255043510042	油缸(L)(H=3000)	Cylinder (L)Φ50xΦ40x1440(H=3000)	1	
	255043510043	油缸(L)(H=3300)	Cylinder (L)Φ50xΦ40x1590(H=3300)	1	
	255043510044	油缸(L)(H=3500)	Cylinder (L)Φ50xΦ40x1690(H=3500)	1	
	255043510045	油缸(L)(H=3600)	Cylinder (L)Φ50xΦ40x1740(H=3600)	1	
	255043510046	油缸(L)(H=3700)	Cylinder (L)Φ50xΦ40x1790(H=3700)	1	
	255043510047	油缸(L)(H=4000)	Cylinder (L)Φ50xΦ40x1890(H=4000)	1	
	255043510048	油缸(L)(H=4300)	Cylinder (L)Φ50xΦ40x2040(H=4300)	1	
	255043510049	油缸(L)(H=4500)	Cylinder (L)Φ50xΦ40x2140(H=4500)	1	
	255043510050	油缸(L)(H=5000)	Cylinder (L)Φ50xΦ40x2390(H=5000)	1	
	255043510051	油缸(L)(H=5500)	Cylinder (L)Φ50xΦ40x2590(H=5500)	1	
	255043510052	油缸(L)(H=6000)	Cylinder (L)Φ50xΦ40x2840(H=6000)	1	
B	255043510053	油缸(R)(H=2000)	Cylinder (R)Φ50xΦ40x940(H=2000)	1	包括/Inc.4-21.24
	255043510054	油缸(R)(H=2500)	Cylinder (R)Φ50xΦ40x1190(H=2500)	1	
	255043510055	油缸(R)(H=3000)	Cylinder (R)Φ50xΦ40x1440(H=3000)	1	
	255043510056	油缸(R)(H=3300)	Cylinder (R)Φ50xΦ40x1590(H=3300)	1	
	255043510057	油缸(R)(H=3500)	Cylinder (R)Φ50xΦ40x1690(H=3500)	1	
	255043510058	油缸(R)(H=3600)	Cylinder (R)Φ50xΦ40x1740(H=3600)	1	
	255043510059	油缸(R)(H=3700)	Cylinder (R)Φ50xΦ40x1790(H=3700)	1	
	255043510060	油缸(R)(H=4000)	Cylinder (R)Φ50xΦ40x1890(H=4000)	1	
	255043510061	油缸(R)(H=4300)	Cylinder (R)Φ50xΦ40x2040(H=4300)	1	
	255043510062	油缸(R)(H=4500)	Cylinder (R)Φ50xΦ40x2140(H=4500)	1	
	255043510063	油缸(R)(H=5000)	Cylinder (R)Φ50xΦ40x2390(H=5000)	1	
	255043510064	油缸(R)(H=5500)	Cylinder (R)Φ50xΦ40x2590(H=5500)	1	
	255043510065	油缸(R)(H=6000)	Cylinder (R)Φ50xΦ40x2840(H=6000)	1	
C	255098510002	密封件修理包(二级全自由起升缸)	Seal kits (two stage full free lifting cylinder)	2	包含/Inc. 2.12.13.15
1	▲	左连接杆	Connecting rod	1	不单独提供
2	▲	O型密封圈	O ring 26x2.4	1	不单独提供
3	▲	左柱塞杆总成	Piston rod assembly	1	不单独提供
4	▲	调整套	Adjusting bushing	2	不单独提供

256898501054起升油缸(两级全自由门架)/LIFTING CYLINDER (two stage full free)

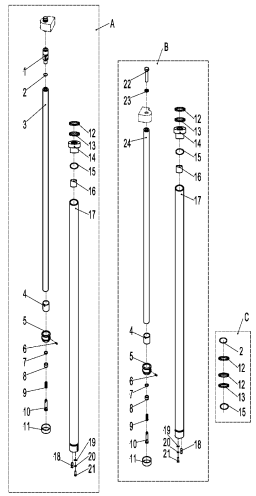

序号/NO	编码/SN	名称	Name	数量/QTY	备注/Remark
5	▲	缓冲活塞	Piston	2	不单独提供
6	▲	内六角凹端紧固螺钉M4x6	ScrewM4x6	2	不单独提供
7	▲	钢丝挡圈φ18	Circlip φ18	2	不单独提供
8	▲	铜套	Copper bushing	2	不单独提供
9	▲	弹簧	Spring	2	不单独提供
10	▲	缓冲柱塞	Buffer plunger	2	不单独提供
11	▲	支承环50x45x15	Supporting ring 50x45x15	2	不单独提供
12	▲	防尘圈	Dust ring DKB40x52x7/10	2	不单独提供
13	▲	轴用密封圈	Seal ring 40x50x6	2	不单独提供
14	▲	导向套	Guide bushing	2	不单独提供
15	▲	O型密封圈	O ring 49.7x2.4	2	不单独提供
16	▲	钢背轴承4030	Bearing 4030	2	不单独提供
17	▲	缸体	Cylinder	2	不单独提供
18	▲	圆柱销10x26	Dowel pin10x26	2	不单独提供
19	910400100008	平垫圈GB97.1-12-200HV	Washer GB97.1-12-200HV	2	
20	910400500008	弹簧垫圈GB93-12	Washer GB93-12	2	
21	910100400009	螺栓GB5786-M12x1.25x25-8.8	Bolt GB5786-M12x1.25x25-8.8	2	
22	910100400029	螺栓GB5786-M16x1.5x40-8.8	Bolt GB5786-M16x1.5x40-8.8	2	
23	910400500010	弹簧垫圈GB93-16	Washer GB93-16	2	
24	▲	右柱塞杆总成	Plunger rod assembly	1	不单独提供

256898501055 起升管路(两级全自由门架)/LIFTING CYLINDER (two stage full free)

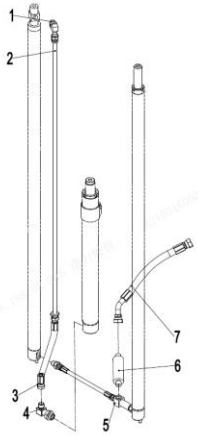

序号/NO	编码/SN	名称	Name	数量/QTY	备注/Remark
1	255043529001	接头(锁定弯)12-2xM22x1.5-60°	Joint 12-2xM22x1.5-60°	1	
2	255043520009	液压钢管焊合L=760	Rise steel pipe L=760	1	H=2000
2	255043520010	液压钢管焊合L=1010	Rise steel pipe L=1010	1	H=2500
2	255043520011	液压钢管焊合L=1300	Rise steel pipe L=1300	1	H=3000
2	255043520012	液压钢管焊合L=1460	Hydraulic pipe L=1460	1	H=3300
2	255043520013	液压钢管焊合L=1610	Hydraulic pipe L=1610	1	H=3500/3600/3700
2	255043520014	液压钢管焊合L=1850	Hydraulic pipe L=1850	1	H=4000
2	255043520015	液压钢管焊合L=2010	Hydraulic pipe L=2010	1	H=4300
2	255043520016	液压钢管焊合L=2110	Hydraulic pipe L=2110	1	H=4500
2	255043520017	液压钢管焊合L=2360	Hydraulic pipe L=2360	1	H=5000
2	255043520018	液压钢管焊合L=2710	Hydraulic pipe L=2710	1	H=5500
2	255043520019	液压钢管焊合L=2960	Hydraulic pipe L=2960	1	H-6000
3	255044020119	液压管总成(直)15-L395-2SC-60°	Hydraulic hose assembly 15-L395-2SC-60°	1	
4	255043520022	接头(锁定弯)2-M27x2-M22x1.5	Joint 2-M27x2-M22x1.5	1	
5	255044010040	接头(三通)	Joint	1	
6	950700300002	限速阀XSF-F16L-48	Speed limit valveXSF-F16L-48	1	
6	950700300003	限速阀XSF-F16L-60	Speed limit valveXSF-F16L-60	1	
7	252144029001	液压管总成(135°)15-L850-2SC-60°	Hydraulic hose assembly (135°)15-L850-2SC-6	1	
8	255044020150	液压管总成(直)15-L360-2SC-60°	Hydraulic hose assembly 15-L360-2SC-60°	1	

256898501056 单附加管路(两级全自由门架)/pipeline installation (two stage full free)

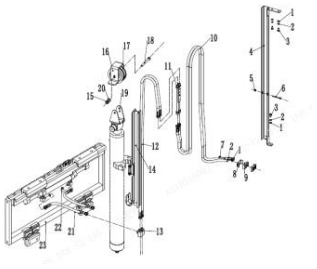

序号/NO	编码/SN	名称	Name	数量/QTY	备注/Remark
1	910400100006	平垫圈GB97.1-8-200HV	Washer GB97.1-8-200HV	11	
2	910400500006	弹簧垫圈GB93-8	Washer GB93-8	11	
3	910200200057	螺钉GB70.1-M8x20-8.8	Screw GB70.1-M8x20-8.8	7	
4	255028510001	外导槽焊合L=670	Groove welding L=670	1	H=2000
4	255028510002	外导槽焊合L=840	Groove welding L=840	1	H=2500
4	255028510003	外导槽焊合L=1090	Groove welding L=1090	1	H=3000
4	255028510004	外导槽焊合L=1240	Groove welding L=1240	1	H=3300/3500
4	255028510005	外导槽焊合L=1390	Groove welding L=1390	1	H=3600/3700
4	255028510006	外导槽焊合L=1640	Groove welding L=1640	1	H=4000
5	910300500003	螺母GB889.1-M6-10	Nut GB889.1-M6-10	2	
6	910200200046	螺钉GB70.1-M6x60-8.8	Screw GB70.1-M6x60-8.8	2	
7	910100300025	螺栓GB5783-M8x35-8.8	Bolt GB5783-M8x35-8.8	4	
8	255028520035	安装板(管夹)	Pipe press fixedly piank	1	
9	255028520034	胶管固定块	Hose fixing bloke	2	
10	252030520016	液压管总成(直)10-L2220-1SC-60°	Hydraulic hose assembly 10-L2220-1SC-60°	2	H=2000
10	254130520009	液压管总成(直)10-L2470-1SC-60°	Hydraulic hose assembly 10-L2470-1SC-60°	2	H=2500
10	263028520010	液压管总成(直)10-L2940-1SC-60°	Hydraulic hose assembly 10-L2940-1SC-60°	2	H=3000
10	255031020013	液压管总成(直)10-L3180-1SC-60°	Hydraulic hose assembly 10-L3180-1SC-60°	2	H=3300/3500
10	254128520039	液压管总成(直)10-L3250-1SC-60°	Hydraulic hose assembly 10-L3250-1SC-60°	2	H=3600/3700
10	255028520059	液压管总成(直)10-L3600-1SC-60°	Hydraulic hose assembly 10-L3600-1SC-60°	2	H=4000
11	255028510022	过渡钢管	Transition steel pipe	1	
12	255028520008	液压管总成(直)10-L1030-1SC-60°	Hydraulic hose assembly10-L1030-1SC-60°	2	H=2000
12	255028520009	液压管总成(直)10-L1280-1SC-60°	Hydraulic hose assembly10-L1280-1SC-60°	2	H=2500
12	255028520010	液压管总成(直)10-L1470-1SC-60°	Hydraulic hose assembly10-L1470-1SC-60°	2	H=3000
12	255028520011	液压管总成(直)10-L1620-1SC-60°	Hydraulic hose assembly10-L1620-1SC-60°	2	H=3300
12	255028520012	液压管总成(直)10-L1730-1SC-60°	Hydraulic hose assembly10-L1730-1SC-60°	2	H=3500
12	255028520013	液压管总成(直)10-L1550-1SC-60°	Hydraulic hose assembly10-L1550-1SC-60°	2	H=3600/3700
12	255028520015	液压管总成(直)10-L1770-1SC-60°	Hydraulic hose assembly10-L1770-1SC-60°	2	H=4000
13	255029020024	接头(锁定弯)8-2xM16x1.5-60°	Joint 8-2XM16x1.5-60°	2	
14	255028510011	内导槽焊合L=545	Groove welding L=545	1	H=2000
14	255028510012	内导槽焊合L=670	Groove welding L=670	1	H=2500

256898501056 单附加管路(两级全自由门架)/pipeline installation (two stage full free)

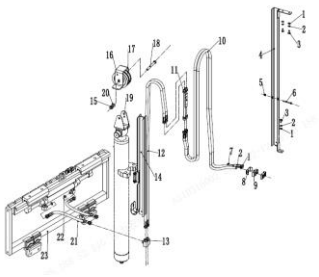

序号/NO	编码/SN	名称	Name	数量/QTY	备注/Remark
14	255028510013	内导槽焊合L=795	Groove welding L=795	1	H=3000
14	255028510014	内导槽焊合L=870	Groove welding L=870	1	H=3500
14	255028510015	内导槽焊合L=920	Groove welding L=920	1	H=3600/3700
14	255028510016	内导槽焊合L=960	Groove welding L=960	1	H=4000
15	910300500006	螺母GB889.1-M12-10	Nut GB889.1-M12-10	1	
16	255028520043	挡板	board	1	
17	255030520021	滑轮Φ110x27(单槽)	Pulley Φ110x27	4	
18	910100100058	螺栓GB5782-M12x100-8.8	Bolt GB5782-M12x100-8.8	1	
19	255030520026	滑轮架体	Pulley frame	1	
20	910400100006	平垫圈GB97.1-8-200HV	Washer GB97.1-8-200HV	10	
21	255042520101	液压管总成(90°)10-L500-1SC-60°-0°	Hydraulic hose assembly (90)10-L500-1SC-60°-	2	
22	910800100042	O形圈-外13.6x2.4	Oring 13.6x2.4	2	
23	255042510004	侧移器总成(LH)	Side shiifter assembly(LH)	1	
23	255042510001	侧移器总成(LD)	Side shiifter assembly(LD)	1	
23	255042510002	侧移器总成(卡斯卡特)	Side shiifter assembly(CASCADE)	1	

256898501057双附加管路(两级全自由门架)/pipeline installation (two stage full free)

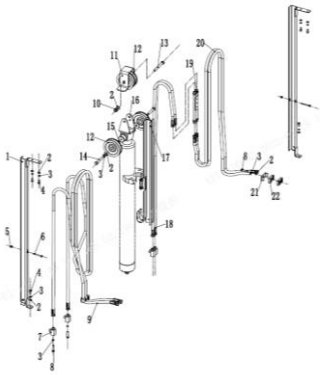

序号/NO	编码/SN	名称	Name	数量/QTY	备注/Remark
1	255029010001	外导槽焊合L=670	Groove welding L=670	1	H=2000
1	255029010002	外导槽焊合L=840	Groove welding L=840	1	H=2500
1	255029010003	外导槽焊合L=1090	Groove welding L=1090	1	H=3000
1	255029010004	外导槽焊合L=1240	Groove welding L=1240	1	H=3300/3500
1	255029010005	外导槽焊合L=1390	Groove welding L=1390	1	H=3600/3700
1	255029010006	外导槽焊合L=1640	Groove welding L=1640	1	H=4000
2	910400100006	平垫圈GB97.1-8-200HV	Washer GB97.1-8-200HV	10	
3	910400500006	弹簧垫圈GB93-8	Washer GB93-8	13	
4	910200200057	螺钉GB70.1-M8x20-8.8	Screw GB70.1-M8x20-8.8	13	
5	910300500003	螺母GB889.1-M6-10	Nut GB889.1-M6-10	3	
6	910200200046	螺钉GB70.1-M6x60-8.8	Screw GB70.1-M6x60-8.8	3	
7	255029020024	接头(锁定弯)8-2xM16x1.5-60°	Joint 8-2xM16x1.5-60°	4	
8	910100300025	螺栓GB5783-M8x35-8.8	Bolt GB5783-M8x35-8.8	4	
9	284023520003	液压管总成(90°)10-L2500-1SC-60°	Hydraulic hose assembly （90°）10-L2500-1SC	2	H=2000
9	255028520042	液压管总成(90°)10-L2500-1SC-60°	Hydraulic hose assembly （90°）10-L2800-1SC	2	H=2500
9	252028520022	液压管总成(90°)10-L2500-1SC-60°	Hydraulic hose assembly （90°）10-L3250-1SC	2	H=3000
9	252030520003	液压管总成(90°)10-L2500-1SC-60°	Hydraulic hose assembly （90°）10-L3470-1SC	2	H=3300/3500
9	252030520001	液压管总成(90°)10-L3600-1SC-60°	Hydraulic hose assembly（90°）10-L3550-1SC	2	H=3600/3700
9	252030520014	液压管总成(90°)10-L3900-1SC-60°	Hydraulic hose assembly （90°）10-L3900-1SC	2	H=4000
10	910300500006	螺母GB889.1-M12-10	Nut GB889.1-M12-10	1	
11	255028520043	挡板	board	1	
12	255030520021	滑轮Φ110x27(单槽)	Pulley Φ110x27	4	
13	910100100058	螺栓GB5782-M12x100-8.8	Bolt GB5782-M12x100-8.8	1	
14	910100300054	螺栓GB5783-M12x50-8.8	Bolt GB5783-M12x50-8.8	2	
15	910400200005	大垫圈GB96.1-12-200HV	Washer GB96.1-12-200HV	2	
16	255030520026	滑轮架体	Pulley frame	1	
17	255029010008	内导槽焊合L=545	Groove welding L=545	1	H=2000
17	255029010009	内导槽焊合L=670	Groove welding L=670	1	H=2500
17	255029010010	内导槽焊合L=795	Groove welding L=795	1	H=3000
17	255029010011	内导槽焊合L=870	Groove welding L=870	1	H=3300
17	255029010014	内导槽焊合L=920	Groove welding L=920	1	H=3500

256898501057 双附加管路(两级全自由门架)/pipeline installation (two stage full free)

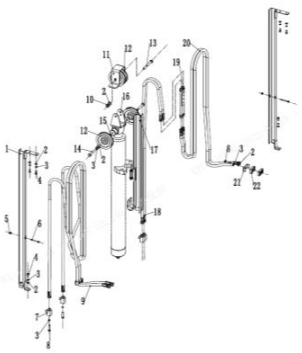

序号/NO	编码/SN	名称	Name	数量/QTY	备注/Remark
17	255029010012	内导槽焊合L=960	Groove welding L=960	1	H=3600
17	255029010015	内导槽焊合L=970	Groove welding L=970		H=3700
17	255029010013	内导槽焊合L=1070	Groove welding L=1070		H=4000
18	255029020009	液压管总成 (直) 10-L820-1SC-60°	Hydraulic hose assembly 10-L820-1SC-60°	2	H=2000
18	255029020010	液压管总成（直) 10--L1070-1SC-60°	Hydraulic hose assembly 10-L1070-1SC-60°	2	H=2500
18	255029020011	液压管总成（直）10--L1260-1SC-60°	Hydraulic hose assembly 10-L1260-1SC-60°	2	H=3000
18	255029020012	液压管总成（直）10--L1410-1SC-60°	Hydraulic hose assembly 10-L1410-1SC-60°	2	H=3300
18	255029020013	液压管总成（直）10--L1510-1SC-60°	Hydraulic hose assembly 10-L1510-1SC-60°	2	H=3500
18	255029020014	液压管总成（直）10--L1340-1SC-60°	Hydraulic hose assembly 10-L1340-1SC-60°	2	H=3600/3700
18	255029020015	液压管总成（直）10--L1560-1SC-60°	Hydraulic hose assembly 10-L1560-1SC-60°	2	H=4000
19	255028510022	过渡钢管	Transition steel pipe	1	
20	252030520016	液压管总成(直)10-L2220-1SC-60°	Hydraulic hose assembly 10-L2220-1SC-60°	2	H=2000
20	254130520009	液压管总成(直)10-L2470-1SC-60°	Hydraulic hose assembly 10-L2470-1SC-60°	2	H=2500
20	263028520010	液压管总成(直)10-L2940-1SC-60°	Hydraulic hose assembly 10-L2940-1SC-60°	2	H=3000
20	255031020013	液压管总成(直)10-L3180-1SC-60°	Hydraulic hose assembly 10-L3180-1SC-60°	2	H=3300/3500
20	254128520039	液压管总成(直)10-L3250-1SC-60°	Hydraulic hose assembly 10-L3250-1SC-60°	2	H=3600/3700
20	255028520059	液压管总成(直)10-L3600-1SC-60°	Hydraulic hose assembly 10-L3600-1SC-60°	2	H=4000
21	255028520035	安装板(管夹)	Pipe press fixedly piank	2	
22	255028520034	胶管固定块	Hose fixing bloke	4	

门架 (四级门架)/Mast (four stage full free lift)

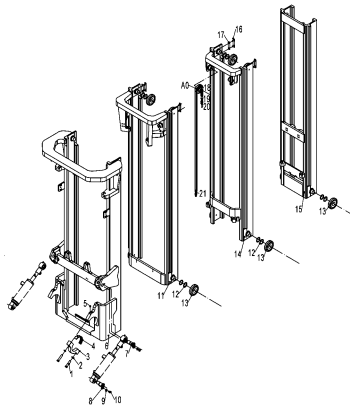

序号/NO	编码/SN	Name	名称	数量/QTY	备注/Remarks
1	910100200012	Bolt GB5785-M14x1.5x70-8.8	螺栓GB5785-M14x1.5x70-8.8	4	
2	910400500009	Washer GB93-14	弹簧垫圈GB93-14	4	
3	256844021014	Bearing cover	支座盖	2	
4	254144020063	Bearing bush	轴瓦	2	
5	911200100004	Oil Cup JB7940.1-M10x1	油杯JB7940.1-M10x1	2	
6	256945211021	Outer mast 6100	外门架焊合(6100)	1	H=6100
6	256945211022	Outer mast 6600	外门架焊合(6600)	1	H=6600
6	256945211023	Outer mast 7000	外门架焊合(7000)	1	H=7000
7	255044010057	Axle Φ30x82	带耳轴Φ30x82	4	
8	910400500007	Washer GB93-10	弹簧垫圈GB93-10	4	
9	910100300035	Bolt GB5783-M10x20-8.8	螺栓GB5783-M10x20-8.8	4	
10	253645213001	Middle mast 6100	中门架焊合(1) 6100	1	H=6100
10	253645213002	Middle mast 6600	中门架焊合(1) 6600	1	H=6600
10	253645213003	Middle mast 7000	中门架焊合(1) 7000	1	H=7000
11	253645220001	Washer 0.2	主滚轮调整圈T0.2	12	
11	253645220002	Washer 0.5	主滚轮调整圈T0.5	12	
11	253645220003	Washer 1	主滚轮调整圈T1	12	
12	940200100053	Roller Φ117.5xΦ40x28	主滚轮Φ117.5xΦ40x28	12	选配
12	940200100054	Roller Φ117.0xΦ40x28	主滚轮Φ117.0xΦ40x28	12	
13	256945211401	Middle mast 6100	中门架焊合(2) 6100	1	H=6100
13	256945211402	Middle mast 6600	中门架焊合(2) 6600	1	H=6600
13	256945211403	Middle mast 7000	中门架焊合(2) 7000	1	H=7000
14	253645212001	Inner mast 6100	内门架焊合 6100	1	H=6100
14	253645212002	Inner mast 6600	内门架焊合 6600	1	H=6600
14	253645212003	Inner mast 7000	内门架焊合 7000	1	H=7000
15	253644520011	Base plate	垫板	6	
16	253644520132	Adjusting pad t=0.2	调整垫片t=0.2	6	
16	253644520133	Adjusting pad t=0.5	调整垫片t=0.5	6	
16	253644520134	Adjusting pad t=0.8	调整垫片t=0.8	6	
17	940200500015	Sprocket Bearing 780708K3-Φ95xΦ40x27	链轮轴承780708K3-Φ95xΦ40x27	2	

253698501041门架 (四级门架)/Mast (four stage full free lift)

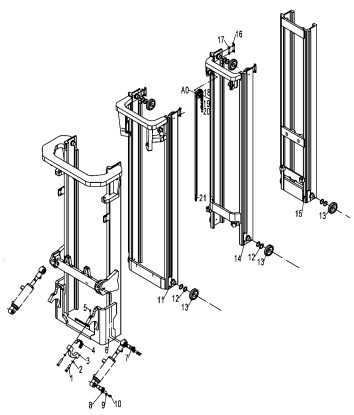

序号/NO	编码/SN	Name	名称	数量/QTY	备注/Remarks
18	910300200012	Nut GB6171-M18x1.5-10	螺母GB6171-M18x1.5-10	10	
19	255044020157	Joint M18x1.5x217	链条螺栓M18x1.5x217	4	
20	255044020156	Joint M18x1.5x102	链条螺栓M18x1.5x102	4	
A0	255044010106	Lifting chain LH1623-89	起升链条LH1623-89	2	H=6100
A0	253543510066	Lifting chain LH1623-93	起升链条LH1623-93	2	H=6600
A0	255044010108	Lifting chain LH1623-99	起升链条LH1623-99	2	H=7000

253698501042门架起升管路 (四级门架)/Mast lifting pipeline(four stage full free lift)

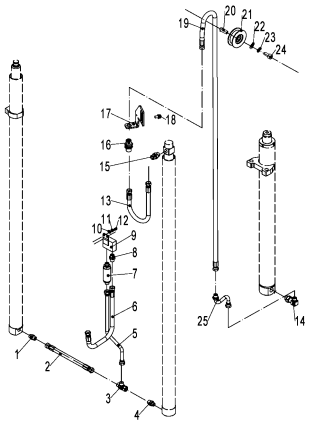

序号/NO	编码/SN	Name	名称	数量/QTY	备注/Remarks
1	251223520122	Connector 12-M20x1.5-M22x1.5-24°	接头(直)12-M20x1.5-M22x1.5-24°	1	
2	253644529001	Hydraulic hose assembly 10-L370-1SC-24°	液压管总成(直)10-L370-1SC-24°	1	
3	950400100002	Connector 12-2xM16x1.5-24°	接头(转接直)12-2xM16x1.5-24°	1	
4	256898520001	explosion-proof valve	防爆阀	1	
5	256945219006	Hydraulic hose assembly (135°)15-L530-2S	液压管总成(135°)15-L530-2SC-24°	1	
6	253644529004	Hydraulic hose assembly (135°)15-L850-2S	液压管总成(135°)15-L850-2SC-24° (带	1	
7	950700300003	Speed limit valve XSF-F16-60	限速阀XSF-F16L-60	1	
8	255023520030	Joint 12-2xM22x1.5-60°	接头(直)12-2xM22x1.5-60°	1	
9	253645219002	Three joint welding	三通焊合 (四级)	1	
10	910400100006	Washer GB97.1-8-200HV	平垫圈GB97.1-8-200HV	2	
11	910400500006	Washer GB93-8	弹簧垫圈GB93-8	2	
12	910100100019	Bolt GB5782-M8x20-8.8	螺栓GB5782-M8x20-8.8	2	
13	253644529002	Hydraulic hose assembly (90°)15-L550-2SC	液压管总成曲直(90°)15-L550-2SC-24°	1	
14	251244529002	Joint 12-M27x2-M22x1.5-24°	接头(锥定弯)12-M27x2-M22x1.5-24°	1	
15	251223520030	Joint 15-M22x1.5-M22x1.5-24°	接头(直)15-M22x1.5-M22x1.5-24°	1	
16	950400500006	Joint 15-M22x1.5-M22x1.5-24°	接头(隔壁直)15-M22x1.5-M22x1.5-24°	1	
17	253645229001	Joint over board	接头过板	1	
18	910100300023	Bolt GB5782-M8x25-8.8	螺栓GB5782-M8x25-8.8	2	
19	253644519301	Hydraulic hose assembly 15-L1920-2SC-24°	液压管总成(直)15-L1920-2SC-24°	1	H=6100
19	253645219302	Hydraulic hose assembly 15-L2180-2SC-24°	液压管总成(直)15-L2180-2SC-24°	1	H=6600
19	253645219303	Hydraulic hose assembly 15-L2500-2SC-24°	液压管总成(直)15-L2500-2SC-24°	1	H=7000
20	255044520081	Bush Φ20XΦ13x33	衬套Φ20XΦ13x33	1	
21	255044520096	Pulley Φ120x36 (Single)	滑轮Φ120x36(单槽)	1	
22	910400100008	Washer GB97.1-12-200HV	平垫圈GB97.1-12-200HV	1	
23	910400500008	Washer GB93-12	弹簧垫圈GB93-12	1	
24	910100300054	Bolt GB5783-M12x50-8.8	螺栓GB5783-M12x50-8.8	1	
25	253645219003	Welding of intermediate cylinder transiti	中缸过渡钢管焊合	1	

253698501043货叉架（四级门架）/Fork carrier(four stage full free lift)

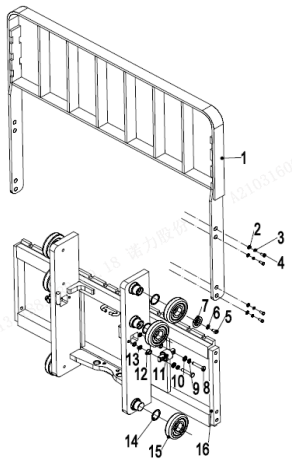

序号/NO	编码/SN	Name	名称	数量/QTY	备注/Remarks
1	2537405100001	Load backrest welding(1100x1080)	挡货架焊合1100x1080	1	
2	910400100009	Washer GB97.1-14-200HV	平垫圈GB97.1-14-200HV	8	
3	910400500009	Washer GB93-14	弹黄垫圈GB93-14	8	
4	910100300062	Bolt GB5783-M14x30-8.8	螺栓GB5783-M14x30-8.8	8	
5	910100300020	Bolt GB5783-M8x16-8.8	螺栓GB5783-M8x16-8.8	2	
6	910400500006	Spring Washer GB93-8	弹黄垫圈GB93-8	2	
7	253638020301	Roller cover	滚轮压盖	2	
8	910100300041	Bolt GB5783-M10x50-8.8	螺栓GB5783-M10x50-8.8	4	
9	910400500007	Washer GB93-10	弹黄垫圈GB93-10	8	
10	910400100007	Washer GB97.1-14-200HV	平垫圈GB97.1-10-200HV	8	
11	940200200005	Side roller Φ 42 - CD = 68	侧滚轮Φ42-CD=68	2	
12	255038020008	Adjusting sleeve	调整套	4	
13	255038020009	Adjustable pad	调整垫	12	
14	253644520020	Washer Φ45xΦ36x0.2	垫圈Φ45xΦ36x0.2	6	
14	253644520021	Washer Φ45xΦ36x0.5	垫圈Φ45xΦ36x0.5	6	
14	253644520015	Washer Φ45xΦ36x1	垫圈Φ45xΦ36x1	6	
15	940200100053	Roller Φ117.5xΦ40x28	主滚轮Φ117.5xΦ40x28	12	选配
15	940200100054	Roller Φ117.7xΦ40x28	主滚轮Φ117.7xΦ40x28	12	
15	940200100055	Roller Φ117.2xΦ40x28	主滚轮Φ117.2xΦ40x28	12	
16	253738014001	Assembly drawing of fork rack welding	货叉架焊合(四级全自由门架1040)	1	32C

253698501044侧移器及管路安装(四级门架)/Side shifter and pipeline installation(four stage full free lift)

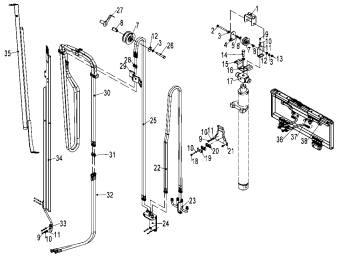

序号/NO	编码/SN	Name	名称	数量/QTY	备注/Remarks
1	253630520904	Middle cylinder rubber tube cover	中缸胶管护罩	1	
2	910100100060	Bolt GB5782-M12X120-8.8	螺栓GB5782-M12x120-8.8	1	
3	910400500008	Spring washers GB93-12	弹黄垫圈GB93-12	3	
4	253630520906	Stent	支架	2	
5	254130520016	bush Φ20x φ13x43	衬套Φ20xΦ13x43	1	
6	910400200005	Large washers GB96.1-12-200HV	大垫圈GB96.1-12-200HV	2	
7	251127520001	Pulley φ110x42(double groove)	滑轮Φ110x42(双槽)	2	
8	255044520081	bush Φ20x φ13x33	衬套Φ20XΦ13x33	2	
9	910100300020	Bolt GB5783-M8x16-8.8	螺栓GB5783-M8x16-8.8	6	
10	910400500006	Spring washers GB93-8	弹黄垫圈GB93-8	6	
11	910400100006	Plain washers GB97.1-8-200HV	平垫圈GB97.1-8-200HV	6	
12	910400100008	Plain washers GB97.1-12-200HV	平垫圈GB97.1-12-200HV	3	
13	910300100008	Nuts GB6170-M12-10	螺母GB6170-M12-10	1	
14	910100200016	Bolt GB5785-M16x1.5x70-8.8	螺栓GB5785-M16x1.5x70-8.8	1	
15	910400500010	Spring washers GB93-16	弹黄垫圈GB93-16	1	
16	253645220012	Middle cylinder chain baffle	中缸链条挡板	1	
17	253645220011	Cylinder head	缸头	1	
18	910100300025	Bolt GB5783-M8x35-8.8	螺栓GB5783-M8x35-8.8	4	
19	255028520035	Pipe clamp mounting plate	管夹安装板	4	
20	255028520034	Rubber tube fixing block	胶管固定块	8	
21	253630510001	Intermediate cylinder rubber tube transit	中缸胶管过渡架	1	
22	251328520704	Hydraulic hose assembly 10-L2220-1SC-24°	液压管总成(直)10-L2220-1SC-24°	2	H=6100
22	251329020702	Hydraulic hose assembly 10-L2360-1SC-24°	液压管总成(直)10-L2360-1SC-24°	2	H=6600
22	251330520702	Hydraulic hose assembly 10-L2510-1SC-24°	液压管总成(直)10-L2510-1SC-24°	2	H=7000
23	253631120001	Single attached hose bracket (24 °)	单附胶管支架(24°)	1	
24	253631110003	Joint body	接头体	1	
25	253631120101	Hydraulic hose assembly 10-L1850-1SC-24°	液压管总成(直)10-L1850-1SC-24°	2	H=6100
25	253631120102	Hydraulic hose assembly 10-L1980-1SC-24°	液压管总成(直)10-L1980-1SC-24°	2	H=6600
25	251228520702	Hydraulic hose assembly 10-L2150-1SC-24°	液压管总成(直)10-L2150-1SC-24°	2	H=7000
26	910100100054	Bolt GB5782-M12x80-8.8	螺栓GB5782-M12x80-8.8	1	
27	256844520021	Hose baffle	胶管挡板	1	

253698501044侧移器及管路安装(四级门架)/Side shifter and pipeline installation(four stage full free lift)

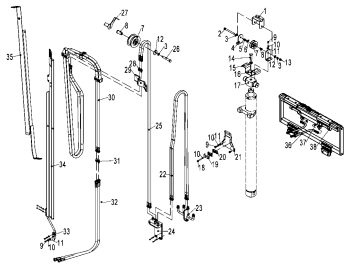

序号/NO	编码/SN	Name	名称	数量/QTY	备注/Remarks
28	950400600006	Joint 10-M16x1.5-M16x1.5-24°	接头(隔壁弯组)10-M16x1.5-M16x1.5-24°	2	
29	253631120002	Joint Transition Plate	接头过渡板	1	
30	251230520704	Hydraulic hose assembly 10-L2610-1SC-24°	液压管总成(直)10-L2610-1SC-24°	2	
30	253631020205	Hydraulic hose assembly 10-L2970-1SC-24°	液压管总成(直)10-L2970-1SC-24°	2	
30	251231020706	Hydraulic hose assembly 10-L3450-1SC-24°	液压管总成(直)10-L3450-1SC-24°	2	
31	251330510004	Hydraulic steel pipe welding (24 °)	液压钢管焊合 (24°)	1	
32	253630520006	Hydraulic hose assembly 10-L1070-1SC-24°	液压管总成(直)10-L1070-1SC-24°	2	
33	253631110001	Internal guide groove (right) connecting	内导槽 (右) 连接杆	1	
34	253631110701	External guide groove welding 6100	外导槽焊合6100	1	H=6100
34	253631110702	External guide groove welding 6600	外导槽焊合6600	1	H=6600
34	253631110703	External guide groove welding 7000	外导槽焊合7000	1	H=7000
35	253631110704	Internal Guide Groove Welding 6100	内导槽焊合6100	1	H=6100
35	253631110705	Internal Guide Groove Welding 6600	内导槽焊合6600	1	H=6600
35	253631110706	Internal Guide Groove Welding 7000	内导槽焊合7000	1	H=7000
36	910400100005	Plain washers GB97.1-6-200HV	平垫圈GB97.1-6-200HV	1	
37	910400500005	Spring washers GB93-6	弹簧垫圈GB93-6	1	
38	910100100123	Bolt GB5782-M6X20-8.8	螺栓GB5782-M6x20-8.8	1	
39	253631120003	Install bent frame with single guide groo	单附导槽安装弯架	1	
40	251242520001	Hydraulic hose assembly (90°)12-L300-1SC	液压胶管总成(90°)12-L300-1SC-24° -0	2	
41	910800100042	Oring 13.6x2.4	O形圈-外13.6x2.4	2	
42	256042510004	Side shiifter assembly1100(LH)	外置侧移器1100(LH)	1	
42	253542510001	Side shiifter assembly1100(LD)	外置侧移器1100(LD)	1	
42	256042510002	Side shiifter assembly(CASCADE)	侧移器总成(卡斯卡特)	1	

双附加管路(四级门架)/DOUBLE ADDITIONAL TUBE((four stage full free lift)

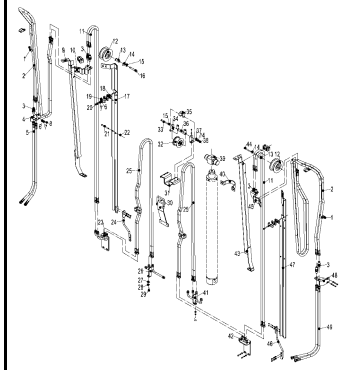

序号/NO	编码/SN	Name	名称	数量/QTY	备注/Remarks
1	951000100004	Hose Clamp 26	管夹YGE包胶26	4	
2	251230520704	Hydraulic hose assembly 10-L2610-1SC-24°	液压管总成(直)10-L2610-1SC-24°	4	H=6100
2	253631020205	Hydraulic hose assembly 10-L2970-1SC-24°	液压管总成(直)10-L2970-1SC-24°	4	H=6600
2	251231020706	Hydraulic hose assembly 10-L3450-1SC-24°	液压管总成(直)10-L3450-1SC-24°	4	H=7000
3	950400500006	Joint 15-M22x1.5-M22x1.5-24°	接头(隔壁直)15-M22x1.5-M22x1.5-24°	8	
4	253631320005	Transitional mounting plate	过渡安装板	1	
5	253631320101	Hydraulic hose assembly 10-L1500-1SC-24°	液压管总成(直)10-L1500-1SC-24°	2	
6	910400100006	Plain washers GB97.1-8-200HV	平垫圈GB97.1-8-200HV	23	
7	910400500006	Spring washers GB93-8	弹簧垫圈GB93-8	23	
8	910100300020	Bolt GB5783-M8x16-8.8	螺栓GB5783-M8x16-8.8	20	
9	253631310701	External guide groove welding 6100	外导槽焊合6100	1	H=6100
9	253631310702	External guide groove welding 6600	外导槽焊合6600	1	H=6600
9	253631310703	External guide groove welding 7000	外导槽焊合7000	1	H=7000
10	253631320004	Joint Transition Plate	接头过渡板	1	
11	253631120101	Hydraulic hose assembly 10-L1850-1SC-24°	液压管总成(直)10-L1850-1SC-24°	4	H=6100
11	253631120102	Hydraulic hose assembly 10-L1980-1SC-24°	液压管总成(直)10-L1980-1SC-24°	4	H=6600
11	251228520702	Hydraulic hose assembly 10-L2150-1SC-24°	液压管总成(直)10-L2150-1SC-24°	4	H=7000
12	251127520001	Pulley Φ110x42(double groove)	滑轮Φ110x42(双槽)	2	
13	255044520081	bush Φ20x Φ13x33	衬套Φ20XΦ13x33	2	
14	910400200005	Large washers GB96.1-12-200HV	大垫圈GB96.1-12-200HV	6	
15	910400500008	Spring washers GB93-12	弹簧垫圈GB93-12	3	
16	910100100054	Bolt GB5782-M12x80-8.8	螺栓GB5782-M12x80-8.8	1	
17	253631310704	Internal Guide Groove Welding 6100	内导槽焊合6100	1	H=6100
17	253631310705	Internal Guide Groove Welding 6600	内导槽焊合6600	1	H=6600
17	253631310706	Internal Guide Groove Welding 7000	内导槽焊合7000	1	H=7000
18	255028520034	Rubber tube fixing block	胶管固定块	12	
19	255028520035	Pipe clamp mounting plate	管夹安装板	6	
20	910100300027	Bolt GB5783-M8x45-8.8	螺栓GB5783-M8x45-8.8	6	
21	910100300018	Bolt GB5783-M6x60-8.8	螺栓GB5783-M6x60-8.8	4	
22	910300500003	Nut GB889.1-M6-10	螺母GB889.1-M6-10	4	
23	253631310004	Hydraulic steel pipe welding (24 °)	液压钢管焊合(四联24°)	1	

双附加管路(四级门架)/DOUBLE ADDITIONAL TUBE((four stage full free lift)

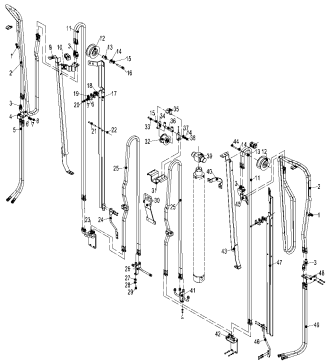

序号/NO	编码/SN	Name	名称	数量/QTY	备注/Remarks
24	253631310001	Internal guide groove (left) connecting r	内导槽（左）连接杆	1	
25	251328520704	Hydraulic hose assembly 10-L2220-1SC-24°	液压管总成(直)10-L2220-1SC-24°	4	H=6100
25	251329020702	Hydraulic hose assembly 10-L2360-1SC-24°	液压管总成(直)10-L2360-1SC-24°	4	H=6600
25	251330520702	Hydraulic hose assembly 10-L2510-1SC-24°	液压管总成(直)10-L2510-1SC-24°	4	H=7000
26	253631310002	Double attached hose bracket (24 °)	双附胶管支架(24°)	1	
27	910300100006	Nut GB6170-M8-10	螺母GB6170-M8-10	2	
28	910100300025	Bolt GB5783-M8x35-8.8	螺栓GB5783-M8x35-8.8	2	
29	910100300025	Bolt GB5783-M8x35-8.8	螺栓GB5783-M8x35-8.8	2	
30	253631310003	Intermediate cylinder rubber tube transit	中缸胶管固定架	1	
31	253645220012	Middle cylinder chain baffle	中缸链条挡板	1	
32	253631020020	Pulley Φ104x76	滑轮Φ104x76(四联)	1	
33	910100100060	Bolt GB5782-M12x120-8.8	螺栓GB5782-M12x120-8.8	1	
34	253630520906	Stent	支架	2	
35	253630520904	Middle cylinder rubber tube cover	中缸胶管护罩	1	
36	253631020021	Bush Φ20xΦ13x73	衬套Φ20xΦ13x73	1	
37	910400100008	Flat Washer GB97.1-12-200HV	平垫圈GB97.1-12-200HV	2	
38	910300100008	Nut GB6170-M12-10	螺母GB6170-M12-10	1	
39	253645220011	Cylinder head	缸头	1	
40	253644520004	Embrace hoop	抱箍	1	
41	253631101002	Single attached hose bracket (24 °)	单附胶管支架(24°)	1	
42	253631110003	Joint body	接头体	1	H=6100
42	253631110701	External guide groove welding 6100	外导槽焊合6100	1	H=6600
42	253631110702	External guide groove welding 6600	外导槽焊合6600	1	H=7000
43	253631110703	External guide groove welding 7000	外导槽焊合7000	1	
44	910100100059	Bolt GB5782-M12x110-8.8	螺栓GB5782-M12x110-8.8	1	
45	253631120002	Joint Transition Plate	接头过渡板	1	
46	253631110001	Internal guide groove (right) connecting	内导槽（右）连接杆	1	H=6100
46	253631110704	Internal Guide Groove Welding 6100	内导槽焊合6100	1	H=6600
46	253631110705	Internal Guide Groove Welding 6600	内导槽焊合6600	1	H=7000
47	253631110706	Internal Guide Groove Welding 7000	内导槽焊合7000	1	
48	253631120005	Transitional mounting plate	过渡安装板	1	
49	251230520002	Hydraulic hose assembly 10-1260-1SC-24°	液压管总成(直)10-L1260-1SC-24°	2	

253698501045短起升油缸(四级全自由门架)/SHORT LIFTING CYLINDER (four stage full free lift)

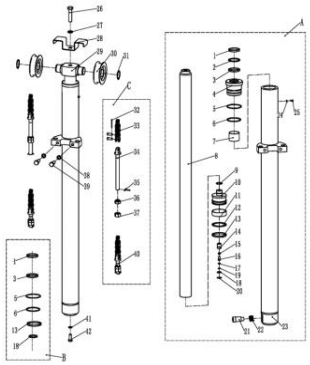

序号/NO	编码/SN	Name	名称	数量/QTY	备注/Remarks
A	253645218001	Short lifting cylinderΦ75xΦ50x830	油缸(M)Φ75xΦ50x830	1	H=6100
A	253645218002	Short lifting cylinderΦ75xΦ50x895	油缸(M)Φ75xΦ50x895	1	H=6600
A	253645218003	Short lifting cylinderΦ75xΦ50x975	油缸(M)Φ75xΦ50x975	1	H=7000
B	255098510002	Seal kits(middle cylinder)	密封件修理包(三级全自由中缸)	1	
C	255044010101	Lifting chain LH1623×77	起升链条LH1623×77	2	H=6100
C	255043510139	Lifting chain LH1623×79	起升链条LH1623×79	2	H=6600
C	255044510137	Lifting chain LH1623×81	起升链条LH1623×81	2	H=7000
1	▲	Dust ring 50x58x7/6.5	防尘圈50x58x7/6.5	1	
2	▲	Catch 50×60×3	挡片50x60x3	1	
3	▲	Seal ring 50×60×6	密封圈50x60x6	1	
4	▲	Glide sleeve	导向套	1	
5	▲	O ring D75X3.1	O型密封圈D75X3.1	1	
6	▲	O ring D75X3.1	O型密封圈D70x3.1	1	
7	▲	Bearing50x55x40	钢背轴承 50x55x40	1	
8	▲	HSG Piston rod	HSG活塞杆	1	
9	▲	Circlip	钢丝挡圈	1	
10	▲	Piston assembly	活塞总成	1	
11	▲	Support ring 75x20x2.5	支承环75x20x2.5	1	
12	▲	Support ring 75x65x3	支承环75x65x3	1	
13	▲	Seal ring 75x65x6	孔用密封圈	1	
14	▲	Valve cover	阀套	1	
15	▲	Spring	弹簧	1	
16	▲	Valve plug	阀芯	1	
17	▲	Catch	挡片	1	
18	▲	O ring D20x2.4	O型密封圈	1	
19	▲	Circlip 12	孔用弹性挡圈12	1	
20	▲	Circlip 22	孔用弹性挡圈22	1	
21	▲	Slide valve	滑阀	1	
22	▲	Spring2.3x15x48.5	弹簧2.3x15x48.5	1	
23	▲	Cylinder	缸体	1	
24	▲	Spacer	垫片	1	

253698501045短起升油缸(四级全自由门架)/SHORT LIFTING CYLINDER (four stage full free lift)

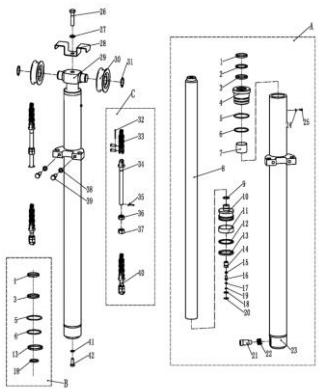

序号/NO	编码/SN	Name	名称	数量/QTY	备注/Remarks
25	▲	Screw M5x5	内六角圆柱头螺钉M5x5	1	
26	910100100071	Bolt GB5782-M16x50-8.8	螺栓GB5782-M16x50-8.8	1	
27	910400500010	Washer GB93-16	弹簧垫圈GB93-16	1	
28	253645220012	Middle cylinder chain baffle	中缸链条挡板	2	
29	253645220012	Cylinder head	缸头	1	
30	940200500001	Chain wheel bearing 780708K-φ110xφ40x27	链轮轴承780708K-φ110xφ40x27	2	
31	910401300020	Circlip GB894.1-40	轴用弹性挡圈GB894.1-40	2	
32	▲	split pin2.5x40	开口销2.5x40	2	
33	▲	LH1623 chain	LH1623板式链	2	
34	▲	Joint	长端接头	2	
35	▲	Split pin 3.2x30	开口销3.2x30	2	
36	▲	Nut M18x1.5	球面螺母M18x1.5	2	
37	▲	Nut M18x1.5	螺母M18x1.5	2	
38	910400500009	Washer GB93-14	弹簧垫圈GB93-14	2	
39	910100400022	Bolt GB5786-M14x1.5x40-8.8	螺栓GB5786-M14x1.5x40-8.8	2	
40	▲	Joint	短端接头	2	
41	910400500008	SpringWasherGB93-12	弹簧垫圈GB93-12	1	
42	910100400009	BoltGB5786-M12x1.25x25-8.8	螺栓GB5786-M12x1.25x25-8.8	1	

253698501046起升油缸(四级全自由门架)/ LIFTING CYLINDER (four stage full free lift)

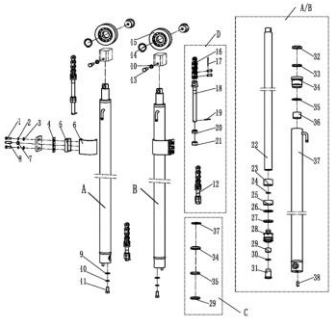

序号/NO	编码/SN	Name	名称	数量/QTY	备注/Remarks
A	253645216001	cylinderΦ60xΦ50x1475	油缸(L)Φ60xΦ50x1475	1	H=6100
A	253645216002	cylinderΦ60xΦ50x1600	油缸(L)Φ60xΦ50x1600	1	H=6600
A	253645216003	cylinderΦ60xΦ50x1680	油缸(L)Φ60xΦ50x1680	1	H=7000
B	253645217001	cylinderΦ60xΦ50x1475	油缸(R)Φ60xΦ50x1475	1	H=6100
B	253645217002	cylinderΦ60xΦ50x1600	油缸(R)Φ60xΦ50x1600	1	H=6600
B	253645217003	cylinderΦ60xΦ50x1680	油缸(R)Φ60xΦ50x1680	1	H=7000
C	253698510001	Seal kits (lifting cylinder)	密封件修理包(25-32C四级边缸)	2	
D	254043510060	Lifting chain LH1634-75	起升链条LH1634-75	2	H=6100
D	256144014006	Lifting chain LH1634-79	起升链条LH1634-79	2	H=6600
D	256144014007	Lifting chain LH1634-85	起升链条LH1634-85	2	H=7000
1	910100300023	Bolt GB5783-M8x25-8.8	螺栓GB5783-M8x25-8.8	4	
2	910400500007	Washer GB93-10	弹簧垫圈GB93-10	4	
3	910400100007	Washer GB97.1-10-200HV	平垫圈GB97.1-10-200HV	4	
4	255044520099	Rubber pad	橡胶垫	2	
5	255044520097	Support block	支撑块	2	
6	255044520098	Blendboard	穹板	2	
7	941100100003	Nut GB6170-M10-10	螺母GB6170-M10-10	2	
8	910300100007	Screw M10x35-8.8	螺钉M10x35-8.8	2	
9	910400100008	Washer GB97.1-12-200HV	平垫圈GB97.1-12-200HV	2	
10	910400500008	Washer GB93-12	弹簧垫圈GB93-12	2	
11	910100400009	Bolt GB5786-M12x1.25x25-8.8	螺栓GB5786-M12x1.25x25-8.8	2	
12	255044020156	Joint M18x1.5x102	链条螺栓M18x1.5x102	2	
13	910100300035	Bolt GB5783-M10x20-8.8	螺栓GB5783-M10x20-8.8	2	
14	910401300020	Circlip GB894.1-40	轴用弹性挡圈GB894.1-40	2	
15	940200500001	Chain wheel bearing 780708K-Φ110xΦ40x27	链轮轴承780708K-Φ110xΦ40x27	2	
16	910900400014	LH1623chain	板式链GB6074-LH1623	2	
17	910600600022	Split pin 2.5x40	开口销2.5x40	2	
18	255044020157	Joint M18x1.5x217	链条螺栓M18x1.5x217	2	
19	910600600030	Split pin 3.2x30	开口销GB91-3.2x30	2	
20	255044020158	Nut M18x1.5	球面螺母M18x1.5	2	
21	910300400007	Nut M18x1.5	螺母GB6173-M18x1.5-05	2	

起升油缸(四级全自由门架)/ LIFTING CYLINDER (four stage full free lift)

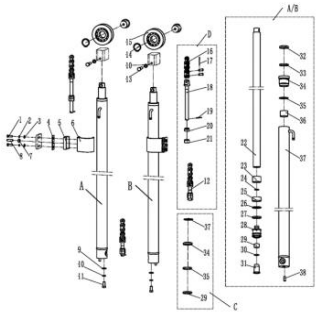

序号/NO	编码/SN	Name	名称	数量/QTY	备注/Remarks
22	▲	Piston rod	活塞杆	1	
23	▲	Adjusting bushing 40.5x49xL2	调整套40.5x49xL2	1	
24	▲	Circlip Φ24x2	钢丝挡圈Φ24x2	1	
25	▲	Bearing 56x20x2.5	支承56x20x2.5	1	
26	▲	Catch 56x45x3	挡片56x44x3	1	
27	▲	Seal ring 56x45x6	孔用密封圈	1	
28	▲	Piston	活塞	1	
29	▲	Copper bushing	铜套	1	
30	▲	Circlip Φ26.5x2	钢丝挡圈Φ26.5x2	1	
31	▲	Buffer ring	缓冲环	1	
32	▲	Dust ring DKB45x58x7/10	防尘圈	1	
33	▲	Seal ring 40x50x6	轴用密封圈	1	
34	▲	Guide bushing	导向套	1	
35	▲	O seal ring 49.7x2.4	O型密封圈	1	
36	▲	Bearing 4030	钢背轴承4030	1	
37	▲	Cylinder	缸体	1	
38	▲	Dowel pin D10x26	圆柱销D10x26	1	

256898501057 电器系统/ELECTRONIC

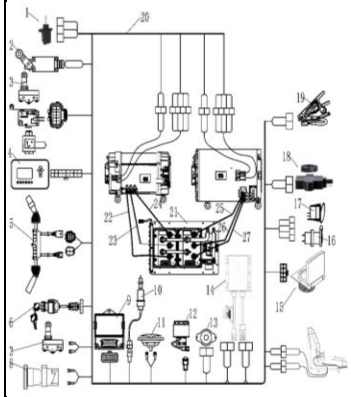

序号/NO	编码/SN	Name	名称	数量/QTY	备注/Remark
1	921800100027	Sensor	传感器999666-94810AAA	1	Opiton
2	920200600010	Limit switch CZ-3108	限位开关CZ-3108	1	Opiton
3	920200300004	Micro Switch(RZ-15GQ22-B3)	微动开关RZ-15GQ22-B3	6	
4	921100100063	Display(3401T-12-96V)	仪表3401T-12-96V	1	配Curtis系统
	921100100154	Display IDD-E-35CD17B(D35C-R)	智能仪表D35C-R	1	配ACM系统
	921100100155	Display IDD-E-35CD17B(D36C-R)	智能仪表D36C-R	1	配Inmotion系统
	257533010113	Display(HY43DR-NL)	仪表(HY43DR-NL)	1	配松正系统
5	256733012002	Combination switch JK361CXNL/3-0000	组合开关JK361CXNL/3-0000	1	2024年后改为该配置
	920200800013	Combination switch JK361CXNL/1	组合开关JK361CXNL/1	1	2024年前为该配置
6	920200200031	Key switch	钥匙开关(一档双路)		
8	920200100020	Emergency StopSwitch(GSLA5-22PN-40-G01/R)	急停开关GSLA5-22PN-40-G01/R	1	
9	251233020001	Integrated electrical box	集成电器盒	1	
	921400100201	Control box WSM-DCDQH-012	控制盒WSM-DCDQH-012	1	比例阀专用
10	920201000002	Brake switch	脚踏开关JK231	1	
11	920500100001	Horn(125-DC24V)	喇叭125-DC24V	1	
12	920500100002	Buzzer(DJB-24B)	喇叭蜂鸣器DJB-24B	1	
13	920500100008	Horn(HYDZ-24V)	喇叭蜂鸣器HYDZ-24V	1	
14	921900100017	DC-DC80V/24V	转换器WDC300NI	1	
15	920200200075	Fingerprint unlock FUC-B2	FUC-B2指纹解锁器	1	Opiton
16	921900100026	USB-YC-A93	USB-YC-A93	1	Opiton
17	920200800020	Warp Switch(YB-nuoli-003)	翘板开关YB-nuoli-003	1	Opiton
18	921800200007	Angle potentiometer	转角电位器	1	Opiton
19	921700100005	Accelerator(FZ3-132-133)	加速器FZ3-132-133	1	配Curtis/ACM/松正系统
	921700100015	Accelerator(JCTH2-5L)	加速器JCTH2-5L		配Inmotion系统
20	256833213000-S00	Controller Assembly(ACM-80V-30Q-11+16)	电控组件(ACM系统-4P30Q-11+16)	1	ACM系统牵引11KW+泵16KW
	256833213100-S11	Controller Assembly(ACM-80V-30Q-16+16)	电控组件(ACM系统-4P30Q-16+16)	1	ACM系统牵引16KW+泵16KW
	256833213105-V000	Controller(ACM-4P30Q-WN16+25.5)	电控组件(ACM-4P30Q-WN16+25.5)	1	ACM系统特殊订单:配皖南16+25.5Kw电机
	256933212000-S00	Controller Assembly(Inmotion-80V-30Q-11+16)	电控组件(Inmotion-4P30Q-11+16)	1	Inmotion系统牵引11KW+泵16KW
	256933212100-S01	Controller Assembly(Inmotion-80V-30Q-16+16)	电控组件(Inmotion-4P30Q-16+16)	1	Inmotion系统牵引16KW+泵16KW
	257533211000-S00	Controller(Curtis F-80V-30G)	电控组件(Curtis F-80V-30G)	1	Curtis F/配11KW合普电机
	257533211000-S10	Controller(Curtis F-80V-30G)	电控组件(Curtis F-80V-30G)	1	Curtis/配16KW合普电机+12V继电器
	257533211000-S22	Controller Assembly(Curtis-80V-30Q)	电控组件(Curtis系统-4P30Q)	1	Curtis F/配16KW合普电机+集成电器盒
	257533211002-S00	Controller(Curtis F-4PxQ-PV)	电控组件(Curtis F-4PxQ比例阀)		Curtis F/配11KW合普电机+恒力比例阀
	257533211002-S11	Controller Assembly(Curtis F-80V-30G)	电控组件(Curtis-F系列-4P30G)	1	Curtis F/配16KW合普电机+恒力比例阀
	256833214000-V000	Controller(SZ-4P30Q-CE)	电控组件(松正系统-4P30Q-CE版)	1	松正25-30Q系统
	256833214100-V000	Controller(SZ-4P38Q-CE)	电控组件(松正系统-4P38Q-CE版)	1	松正35-38Q系统

256898501057 电器系统/ELECTRONIC

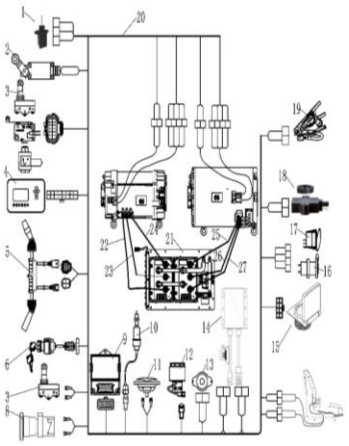

序号/NO	编码/SN	Name	名称	数量/QTY	备注/Remark
21	256933010001	Control harness(ACM-4P30Q)	车身线束(ACM系统-4P30Q)	1	2024年前为该配置
	256833010011	Control harness(ACM-4P30QH)	车身线束(ACM系统-4P30QH)	1	2024年后改为该配置
	256933010020	Control harness(Inmotion-80V-30Q)	车身线束(Inmotion-4P30Q)	1	配Inmotion系统
	256933010011	Control harness(Curtis-30Q)	车身线束(Curtis-30Q)	1	2024年前为该配置
	256933010030	Control harness(Curtis-F系列-30QH)	车身线束(Curtis-F系列-30QH)	1	2024年后改为该配置
	256933010029	Control harness(Curtis-F系列-4P30Q-BLF)	车身线束(Curtis-F系列-4P30Q-比例阀)	1	配Curtis F-比例阀
	256833010052	Control harness(SZ-4P30Q)	车身线束(松正系统-4P30Q)	1	松正25-38Q
	256833010077	Control harness(ACM-4P30Q-SIDE)	车身线束(ACM系统-4P30QH-侧出)	1	新增
	256933010073	Control harness(Curtis-SE)	车身线束(Curtis-SE系列)	1	新增
	256833010091	Control harness(Curtis F-4P30Q)-SIDE BLF	车身线束(Curtis F-4P30Q)-侧出比例阀	1	新增
	256933010074	Control harness(Inmotion-4P30Q)-SIDE	车身线束(Inmotion-4P30Q)-侧出	1	新增
22-27	256733014004	Connection cable assembly 4P25Q(Curtis)	连接线缆总成4P25Q(Curtis-吊装)	1	Curtis 25Q
	256733014003	Connection cable assembly 4P25Q（Inmotion）	连接线缆总成4P25Q（Inmotion-吊装）	1	Inmotion 25Q
	256733014001	Connection cable assembly 4P25Q(ACM)	连接线缆总成4P25Q(Curtis-吊装)	1	ACM 25Q
	256733014005	Connection cable assembly 4P25-30Q(松正)	连接线缆总成4P25-30Q(松正-吊装)	1	松正 4P25-30Q
	256833014007	Connection cable assembly 4P28-35Q（Curtis）	连接线缆总成4P28-35Q（Curtis-吊装）	1	Curtis 4P28-35Q
	256833014003	Connection cable assembly 4P28-38Q（Inmotion）	连接线缆总成4P28-38Q（Inmotion-吊装）	1	Inmotion 4P28-35Q
	256833014001	Connection cable assembly 4P28-35Q（ACM）	连接线缆总成4P28-35Q（ACM-吊装）	1	ACM 4P28-35Q
	256733014005	Connection cable assembly 4P35-38Q(松正)	连接线缆总成4P25-30Q(松正-吊装)	1	松正 4P35-38Q
	256833014009	Connection cable assembly 4P30-38Q(松正-侧出)	连接线缆总成4P30-38Q(松正-侧出)	1	松正-侧出 4P30-38Q

256898501071 电器系统/ELECTRONIC

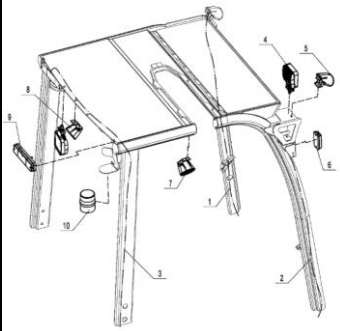

序号/NO	编码/SN	名称	Name	数量/QTY	备注/Remark
1	255034510002	左前车顶护架灯束	Left front roof guard frame light harness	1	
2	255034510003	右前车顶护架灯束	Right front roof guard frame light harness	1	
3	255034510004	后组合灯线束	Rear combination light harness	1	
4	922000100001	灯PDL-LXZM-1	Lamp PDL-LXZM-1	3	
5	922000100014	灯A-LJD-A1	Lamp A-LJD-A1	2	点状蓝光灯
6	922000100052	灯FLDJ-QXD-001	Lamp FLDJ-QXD-001	2	示宽灯
7	922000100028	灯RB-L590-1	Lamp RB-L590-1	2	直线红光界灯
	922000100027	灯RB-L590	Lamp RB-L590	2	直线蓝光界灯
8	922000100014	灯A-LJD-A1	Lamp A-LJD-A1	1	点状蓝光灯
	922000100028	灯RB-L590-1	Lamp RB-L590-1	1	直线红光界灯
	922000100027	灯RB-L590	Lamp RB-L590	1	直线蓝光界灯
	922000100032	灯OW-6202	Lamp OW-6202	1	U形红光界灯
	922000100041	灯OW-6202	Lamp OW-6202	1	U形蓝光界灯
9	922000100053	灯FLDJ-SSWD-003LED	Lamp FLDJ-SSWD-003LED	2	后尾组合灯
10	922000100051	灯FLDJ-JSD-002	Lamp FLDJ-JSD-002	1	警示灯

256898501071 电器系统/ELECTRONIC

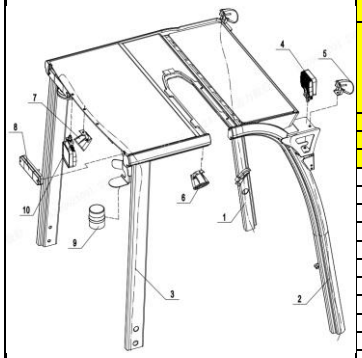

序号/NO	编码/SN	名称	Name	数量/QTY	备注/Remark
1	255034510002	Left front roof guard frame light harness	左前车顶护架灯束	1	
2	255034510003	Right front roof guard frame light harness	右前车顶护架灯束	1	
3	255034510005	Rear combination light harness	后组合灯线束	1	
4	922000100098	Lamp HDL95×95-1-下	灯HDL95×95-1-下	1	
5	922000100088	Lamp WDL76x40-1	灯WDL76x40-1	2	Dot-shaped blue light
6	922000100086	Lamp WDL140×30-1	灯 WDL140×30-1	2	Linear red light boundary lamp
	922000100087	Lamp WDL140×30-2	灯WDL140×30-2	2	Linear blue light boundary lamp
7	922000100088	Lamp WDL76x40-1	灯WDL76x40-1	1	Dot-shaped blue light
	922000100086	Lamp WDL140×30-1	灯 WDL140×30-1	2	Linear red light boundary lamp
	922000100087	Lamp WDL140×30-2	灯WDL140×30-2	2	Linear blue light boundary lamp
	922000100085	Lamp WDL55×40-1	灯WDL55×40-1	1	U-shaped red light boundary lamp
	922000100091	Lamp WDL55×40-2	灯WDL55×40-2	1	U-shaped blue light boundary lamp
8	922000100094	Lamp XHL8-36.5	灯XHL8-36.5	2	U-shaped red light boundary lamp
9	922000100051	Lamp FLDJ-JSD-002	灯FLDJ-JSD-002	1	Warning light
10	922000100095	Lamp WDL85×85-2	灯WDL85×85-2	1	Rear light

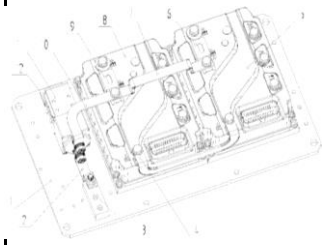

256898501058 电控组件/ELECTRONIC COMPONENTS—ACM系统

序号/NO	编码/SN	名称	Name	数量/QTY	备注/Remark
1	257598528000	铝板(7105091500-00)	Aluminium plate(7105091500-00)	1	
2	257598528002	铜排(999666-65960BAA)	Copper bar(999666-65960BAA)	1	
3	257598537033	接线座(001027-93221AAA)	Terminal base(001027-93221AAA)	1	
4	251298520001	铜排(999666-65649BAA)	COPPER BAR(999666-65649BAA)	1	
5	256898519003-S00	ACMⅡ80C350-4P30Q-11+16-T	ACMⅡ80C350-4P30Q-11+16-T	1	牵引软硬件总成(配11Kw合普电机)
5.1	921400100144	控制器ACM80C350	Controller ACM80C350	1	硬件需导入FE4P30-35Q软件
5	256898519005-S11	ACMⅡ80C350-4P30Q-11+16-T	ACMⅡ80C350-4P30Q-11+16-T	1	牵引软硬件总成(配16Kw合普电机)
5.1	921400100144	控制器ACM80C350	Controller ACM80C350	1	硬件需导入FE4P30-35Q软件
5	256898519007-S01	ACMⅡ80C350-4P30Q-16+16-T	ACMⅡ80C350-4P30Q-16+16-T	1	牵引软硬件总成(配507980000C003底层+集成电器盒)
5.1	921400100144	控制器ACM80C350	Controller ACM80C350	1	硬件需导入FE4P25-35Q软件
5	256898519009-S11	ACMⅡ80C350-4P30Q-16+16-T	ACMⅡ80C350-4P30Q-16+16-T	1	牵引软硬件总成(配配507980200C003底层)
5.1	921400100144	控制器ACM80C350	Controller ACM80C350	1	硬件需导入FE4P25-35Q软件
5	256898519017-S00	ACMⅡ80C350-4P30Q-WN16+25.5-T	ACMⅡ80C350-4P30Q-WN16+25.5-T	1	牵引软硬件总成(配皖南16+25.5Kw电机)
5.1	921400100144	控制器ACM80C350	Controller ACM80C350	1	硬件需导入FE4P25-35Q软件
6	257598537019	熔断器(999666-96358AAA)	Fuse(999666-96358AAA)	1	
7	256898518004	铜排(999666-65762BAA)	Copper bar(999666-65762BAA)	1	
8	256898519004-S00	ACMⅡ80C350-4P30Q-11+16-P	ACMⅡ80C350-4P30Q-11+16-P	1	泵软硬件总成(配11Kw合普电机)
8.1	921400100144	控制器ACM80C350	Controller ACM80C350	1	硬件需导入FE4P30-35Q软件
8	256898519006-S11	ACMⅡ80C350-4P30Q-11+16-P	ACMⅡ80C350-4P30Q-11+16-P	1	泵软硬件总成(配16Kw合普电机)
8.1	921400100144	控制器ACM80C350	Controller ACM80C350	1	硬件需导入FE4P30-35Q软件
8	256898519008-S01	ACMⅡ80C350-4P30Q-16+16-P	ACMⅡ80C350-4P30Q-16+16-P	1	泵软硬件总成(配507980000C003底层+集成电器盒)
8.1	921400100144	控制器ACM80C350	Controller ACM80C350	1	硬件需导入FE4P25-35Q软件
8	256898519010-S11	ACMⅡ80C350-4P30Q-16+16-P	ACMⅡ80C350-4P30Q-16+16-P	1	泵软硬件总成(配配507980200C003底层)
8.1	921400100144	控制器ACM80C350	Controller ACM80C350	1	硬件需导入FE4P25-35Q软件
8	256898519018-S00	ACMⅡ80C350-4P30Q-WN16+25.5-P	ACMⅡ80C350-4P30Q-WN16+25.5-P	1	泵软硬件总成(配皖南16+25.5Kw电机)
8.1	921400100144	控制器ACM80C350	Controller ACM80C350	1	硬件需导入FE4P25-35Q软件
9	257598528001	保险丝(999666-96316AAA)	FUSE(999666-96316AAA)	1	
10	257598528003	铜排(999666-65961BAA)	Copper bar(999666-65961BAA)	1	
11	256898518003	接触器(999666-97506CAA)	Contactor(999666-97506CAA)	1	
12	257598537044	支架(999666-93041AAA)	Support(999666-93041AAA)	1	

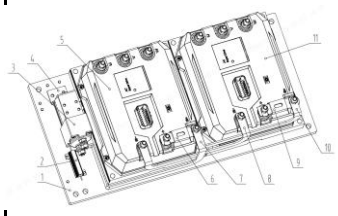

256998501059 电控组件/ELECTRONIC COMPONENTS—Inmotion系统					
序号/NO	编码/SN	Name	名称	数量/QTY	备注/Remark
1	257598528006	Aluminium plate(520x250x10)	铝板(520x250x10)	1	
2	930300200017	Precharge resistor50W/15Ω(999666-76565DAA)	预充电电阻50W/15Ω(999666-76565DAA)	1	
3	920700100006	ContactorDC80V-SW200-583（30724B-01008E）	接触器DC80V-SW200-583（30724B-01008E）	1	
4	257598537044	Support(999666-93041AAA)	支架(999666-93041AAA)	1	
5	256998519001-S00	ACS80M-330C-35P-4P30Q-T	ACS80M-330C-35P-4P30Q-T	1	软硬件总成(256933212000-S00电控配11Kw驱动电机)
5.1	921400100072	Controller ACS80M-330C-35P	控制器ACS80M-330C-35P	1	硬件需导入软件
5	256998519003-S01	ACS80M-330C-35P-4P30Q-T	ACS80M-330C-35P-4P30Q-T	1	软硬件总成(256933212100-S01电控配16Kw驱动电机)
5.1	921400100072	Controller ACS80M-330C-35P	控制器ACS80M-330C-35P	1	硬件需导入软件
6	920100100025	FUSE300A(999666-96358AAA)	保险丝300A(塑料)(999666-96358AAA)	1	
7	257598528005	Copper bar(999666)	铜排(999666)	1	
8	257598528004	Copper bar(999666-65961BAA)	铜排(999666-65060AAA)	1	
9	257598528001	FUSE(999666-96316AAA)	保险丝(999666-96316AAA)	1	
10	257598528007	Copper bar(999666-65059AAA)	铜排(999666-65059AAA)	1	
11	256998519002-S00	ACS80M-330C-28P-4P30Q-P	ACS80M-330C-28P-4P30Q-P	1	软硬件总成(256933212000-S00电控配11Kw驱动电机)
11.1	921400100072	Controller ACS80M-330C-35P	控制器ACS80M-330C-35P	1	硬件需导入软件
11	256998519004-S01	ACS80M-330C-28P-4P30Q-P	ACS80M-330C-28P-4P30Q-P	1	软硬件总成(256933212100-S01电控配16Kw驱动电机)
11.1	921400100072	Controller ACS80M-330C-35P	控制器ACS80M-330C-35P	1	硬件需导入软件

256898501060 电控组件/ELECTRONIC COMPONENTS—Curtis-P系统

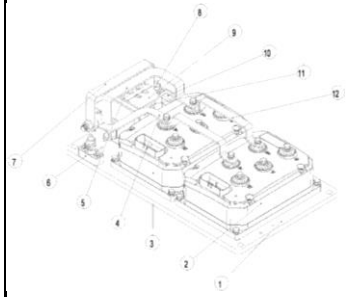

序号/NO	编码/SN	名称	Name	数量/QTY	备注/Remark
1	256733020001	铝板(WX17750300-514)	BASE PLATE(WX17750300-514)	1	
2	257598519001-S00	F6-A-80-450-101-80V-30G-T	F6-A-80-450-101-80V-30G-T	1	软硬件总成(11Kw驱动电机)
2.1	921400100177	ControllerAC-F6-A-80-450-101	控制器AC-F6-A-80-450-101	1	硬件需导入软件
2	257598519003-S10	F6-A-80-450-101-80V-30G-T	F6-A-80-450-101-80V-30G-T	1	软硬件总成(16Kw驱动电机+12V继电器)
2.1	921400100177	控制器AC-F6-A-80-450-101	ControllerAC-F6-A-80-450-101	1	硬件需导入软件
2	257598519005-S22	F6-A-80-450-101-80V-30G-T	F6-A-80-450-101-80V-30G-T	1	软硬件总成(16Kw驱动电机+集成电器盒)
2.1	921400100177	控制器AC-F6-A-80-450-101	ControllerAC-F6-A-80-450-101	1	硬件需导入软件
2	257598519007-S00	F6-A-80-450-101-4PxQ-BLF-T	F6-A-80-450-101-4PxQ-BLF-T	1	软硬件总成(恒力比例阀+11Kw驱动电机)
2.1	921400100177	控制器AC-F6-A-80-450-101	ControllerAC-F6-A-80-450-101	1	硬件需导入软件
2	257598519009-S11	F6-A-80-450-101-4PxQ-BLF-T	F6-A-80-450-101-4PxQ-BLF-T	1	软硬件总成(恒力比例阀+16Kw驱动电机)
2.1	921400100177	控制器AC-F6-A-80-450-101	ControllerAC-F6-A-80-450-101	1	硬件需导入软件
3	257598519002-S00	F6-A-80-450-101-80V-30G-P	F6-A-80-450-101-80V-30G-P		软硬件总成(11Kw驱动电机)
3.1	921400100177	控制器AC-F6-A-80-450-101	ControllerAC-F6-A-80-450-101	1	硬件需导入软件
3	257598519004-S10	F6-A-80-450-101-80V-30G-P	F6-A-80-450-101-80V-30G-P		软硬件总成(16Kw驱动电机+12V继电器)
3.1	921400100177	控制器AC-F6-A-80-450-101	ControllerAC-F6-A-80-450-101	1	硬件需导入软件
3	257598519006-S22	F6-A-80-450-101-80V-30G-P	F6-A-80-450-101-80V-30G-P	1	软硬件总成(16Kw驱动电机+集成电器盒)
3.1	921400100177	控制器AC-F6-A-80-450-101	ControllerAC-F6-A-80-450-101	1	硬件需导入软件
3	257598519008-S00	F6-A-80-450-101-4PxQ-BLF-P	F6-A-80-450-101-4PxQ-BLF-P		软硬件总成(恒力比例阀+11Kw驱动电机)
3.1	921400100177	控制器AC-F6-A-80-450-101	ControllerAC-F6-A-80-450-101	1	硬件需导入软件
3	257598519010-S11	F6-A-80-450-101-4PxQ-BLF-P	F6-A-80-450-101-4PxQ-BLF-P	1	软硬件总成(恒力比例阀+16Kw驱动电机)
3.1	921400100177	控制器AC-F6-A-80-450-101	ControllerAC-F6-A-80-450-101	1	硬件需导入软件
4	256733020012	铜排(WX17750301-1170)	COPPER BAR(WX17750301-1170)	1	
5	256733020010	铜排(WX17750301-1169)	COPPER BAR(WX17750301-1169)	1	
6	257598537016	保险丝座(WX10077FH03)	FUSE HOLDER(WX10077FH03)	1	
7	256733020011	铜排(17750326-014)	COPPER BAR(17750326-014)	1	
8	257598537038	保险丝座(WX10077FH02)	FUSE HOLDER(WX10077FH02)	1	
9	257598537039	接触器(13221197)	Contactor(13221197)	1	
10	257598537015	保险丝(10077FZ4VE500.0)	FUSE(10077FZ4VE500.0)	1	
11	257598537040	支架(17750302)	Support(17750302)	1	
12	256033020002	铜排(17750328-023)	COPPER BAR(17750328-023)	1	

256898501061 电控组件/ELECTRONIC COMPONENTS—松正25-30Q系统

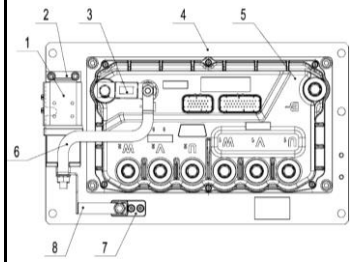

序号/NO	编码/SN	名称	Name	数量/QTY	备注/Remark
1	256898518005	接触器(RW200-5068-48V-ALBRIGHT)	Contactor(RW200-5068-48V-ALBRIGHT)	1	
2	256898518006	支架(SZ7733-350A-DDNLZN-ZC02-Z02)	support(SZ7733-350A-DDNLZN-ZC02-Z02)	1	
3	256898518007	熔断器(ADL-C350-B1)	Fuse(ADL-C350-B1)	1	
4	256898518008	底板(SZ7733-350A-DDNLZN-ZC02-Z01)	inium plate(SZ7733-350A-DDNLZN-ZC02-	1	
5	256898519015-S01	SZ7733-DDNLZN-02-4P30Q-CE-TP	SZ7733-DDNLZN-02-4P30Q-CE-TP	1	控软硬件总成
5.1	921400100352	控制器SZ7733-DDNLZN-02	Controller SZ7733-DDNLZN-02	1	硬件需导入FE4P25-30Q软件
5	256898519015-V000	SZ7733-DDNLZN-02-4P30Q-CE-TP	SZ7733-DDNLZN-02-4P30Q-CE-TP	1	控软硬件总成(新增澳标安全带逻辑)
5.1	921400100352	控制器SZ7733-DDNLZN-02	Controller SZ7733-DDNLZN-02	1	硬件需导入FE4P25-30Q软件
6	256898518009	铜排(SZ7733-350A-DDNLZN-ZC02-Z03)	pper bar(SZ7733-350A-DDNLZN-ZC02-Z03	1	
7	256898518010	接线座(SZ5401-400A-Z05-WC-PVC)	Terminal base(SZ5401-400A-Z05-WC-PVC)	1	
8	256898518011	铜排(SZ7733-350A-DDNLZN-ZC02-Z04)	opper bar(SZ7733-350A-DDNLZN-ZC02-Z04	1	

256898501062 电控组件/ELECTRONIC COMPONENTS—松正35-38Q系统

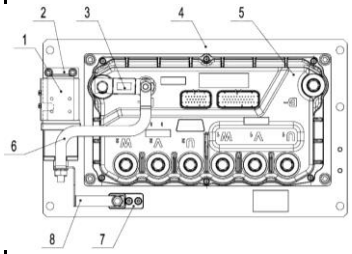

序号/NO	编码/SN	名称	Name	数量/QTY	备注/Remark
1	256898518005	接触器(RW200-5068-48V-ALBRIGHT)	Contactor(RW200-5068-48V-ALBRIGHT)	1	
2	256898518006	支架(SZ7733-350A-DDNLZN-ZC02-Z02)	support(SZ7733-350A-DDNLZN-ZC02-Z02)	1	
3	256898518012	熔断器(ADL-C400-B1)	Fuse(ADL-C400-B1)	1	
4	256898518008	底板(SZ7733-350A-DDNLZN-ZC02-Z01)	inium plate(SZ7733-350A-DDNLZN-ZC02-	1	
5	256898519016-S01	SZ7744-DDNLZN-01-4P38Q-CE-TP	SZ7744-DDNLZN-01-4P38Q-CE-TP	1	控软硬件总成
5.1	921400100353	控制器SZ7744-DDNLZN-01	Controller SZ7744-DDNLZN-01	1	硬件需导入FE4P25-38软件
5	256833214100-V000	SZ7744-DDNLZN-01-4P38Q-CE-TP	SZ7744-DDNLZN-01-4P38Q-CE-TP	1	控软硬件总成(新增澳标安全带逻辑)
5.1	921400100353	控制器SZ7744-DDNLZN-01	Controller SZ7744-DDNLZN-01	1	硬件需导入FE4P25-38软件
6	256898518009	铜排(SZ7733-350A-DDNLZN-ZC02-Z03)	pper bar(SZ7733-350A-DDNLZN-ZC02-Z03	1	
7	256898518010	接线座(SZ5401-400A-Z05-WC-PVC)	Terminal base(SZ5401-400A-Z05-WC-PVC)	1	
8	256898518011	铜排(SZ7733-350A-DDNLZN-ZC02-Z04)	opper bar(SZ7733-350A-DDNLZN-ZC02-Z04	1	

256898501080 蓄电池/BATTERY

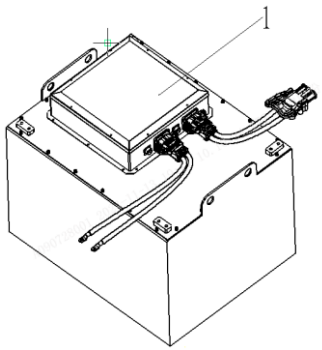

序号/NO	编码/SN	名称	Name	数量/QTY	备注/Remark
1	257537015001	赣锋76.8V206Ah通用版30G(吊装)	30G-80V-206-D-W	1	赣锋/hoisting
1	257537015002	赣锋76.8V277Ah通用版30G(吊装)	30G-80V-277-D-W	1	赣锋/hoisting
1	257537015003	赣锋76.8V412Ah通用版30G(吊装)	30G-80V-412-D-W	1	赣锋/hoisting
1	257537015004	赣锋76.8V554Ah通用版30G(吊装)	30G-80V-554-D-W	1	赣锋/hoisting
1	257537015005	赣锋76.8V206Ah加热通用版30G(吊装)	30G-80V-206-D-W(H)	1	赣锋/hoisting
1	257537015006	赣锋76.8V277Ah加热通用版30G(吊装)	30G-80V-277-D-W(H)	1	赣锋/hoisting
1	257537015007	赣锋76.8V412Ah加热通用版30G(吊装)	30G-80V-412-D-W(H)	1	赣锋/hoisting
1	257537015008	赣锋76.8V554Ah加热通用版30G(吊装)	30G-80V-554-D-W(H)	1	赣锋/hoisting
1	257537042201-V0000	赣锋76.8V206Ah通用版30G(吊装)	30G-80V-206-D-W	1	赣锋/hoisting
1	257537043201-V0000	赣锋76.8V277Ah通用版30G(吊装)	30G-80V-277-D-W	1	赣锋/hoisting
1	257537044201-V0000	赣锋76.8V412Ah通用版30G(吊装)	30G-80V-412-D-W	1	赣锋/hoisting
1	257537045201-V0000	赣锋76.8V554Ah通用版30G(吊装)	30G-80V-554-D-W	1	赣锋/hoisting
1	257537042211-V0000	赣锋76.8V206Ah加热通用版30G(吊装)	30G-80V-206-D-W(H)	1	赣锋/hoisting
1	257537043211-V0000	赣锋76.8V277Ah加热通用版30G(吊装)	30G-80V-277-D-W(H)	1	赣锋/hoisting
1	257537044211-V0000	赣锋76.8V412Ah加热通用版30G(吊装)	30G-80V-412-D-W(H)	1	赣锋/hoisting
1	257537045211-V0000	赣锋76.8V554Ah加热通用版30G(吊装)	30G-80V-554-D-W(H)	1	赣锋/hoisting

256898501080 蓄电池/BATTERY

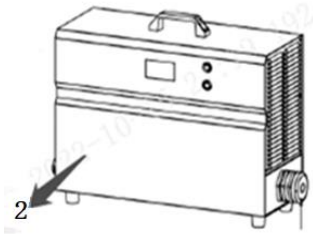

序号/NO	编码/SN	名称	Name	数量/QTY	备注/Remark
2	256836512001	充电器80V65A-R320五芯(三相380±20%V)	Li Charger 80V65A(3p 380±20%V)	1	
	256836512029	充电器80100-R320五芯(三相356～520V)	Li Charger 80V100A(3p 356V-520V)	1	
	256836512023	充电器80150-R320五芯(三相356～520V)	Li Charger 80V150A(3p 356V-520V)	1	
	256836512028	充电器80200-R320五芯(三相356～520V)	Li Charger 80V200A(3p 356V-520V)	1	

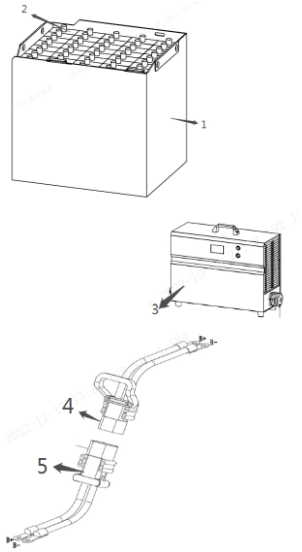

256898501064 蓄电池/BATTERY

序号/NO	编码/SN	Name	名称	数量/QTY	备注/Remark
1	256737014001	Traction battery 80V400Ah	牵引电池80V400Ah	1	
1	256737014003	Traction battery 80V440Ah	牵引电池80V440Ah	1	
2	256798537048	Battery cell 4DB400H	单体4DB400H	40	
2	256798537049	Battery cell 4DB440H	单体4DB400H	40	
3	921000200171	Lead acid Charger 80V65A(3P 380±10%V)	充电器80V65A-R320四芯(三相380±10%中文)	1	
3	921000200853	Lead acid Charger 80V65A(3P 400±10%V)	充电器80V65A-R320五芯(三相400±10%英文)	1	
4	256798537050	Battery Cable Assembly (REMA320 Female)	蓄电池连接线总成(REMA320母头)	1	电池端接插件
5	256733010105	30Q Power Cable Assembly (REMA320 Male head)	30Q电源连接线总成(REMA320公头)	1	车辆段接插件